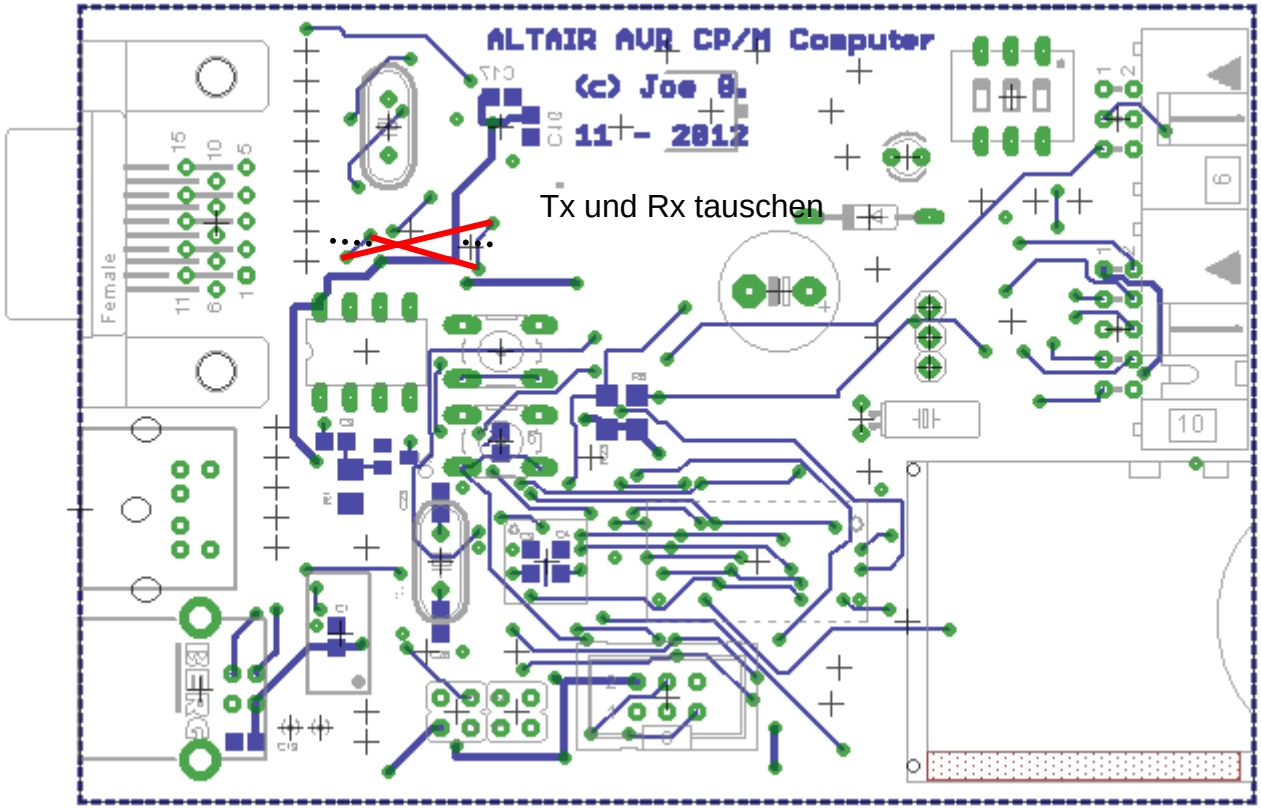
ALTAIR AVR CP/M Computer
(c) Joe B.
11 - 2012
Tx und Rx tauschen
Female

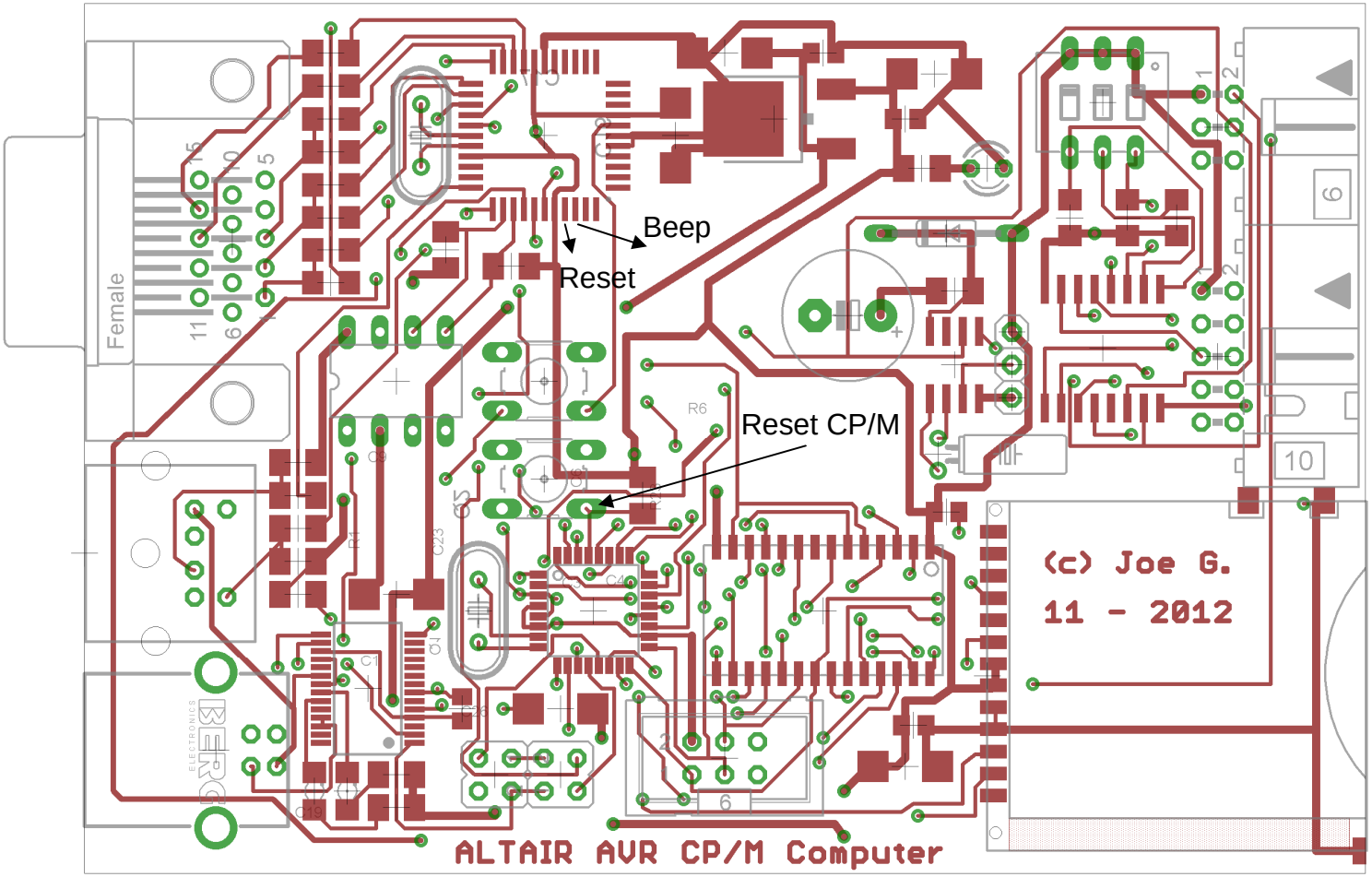
Beep
Reset
Reset CP/M
Female
(c) Joe G.
11 - 2012
ALTAIR AVR CP/M Computer