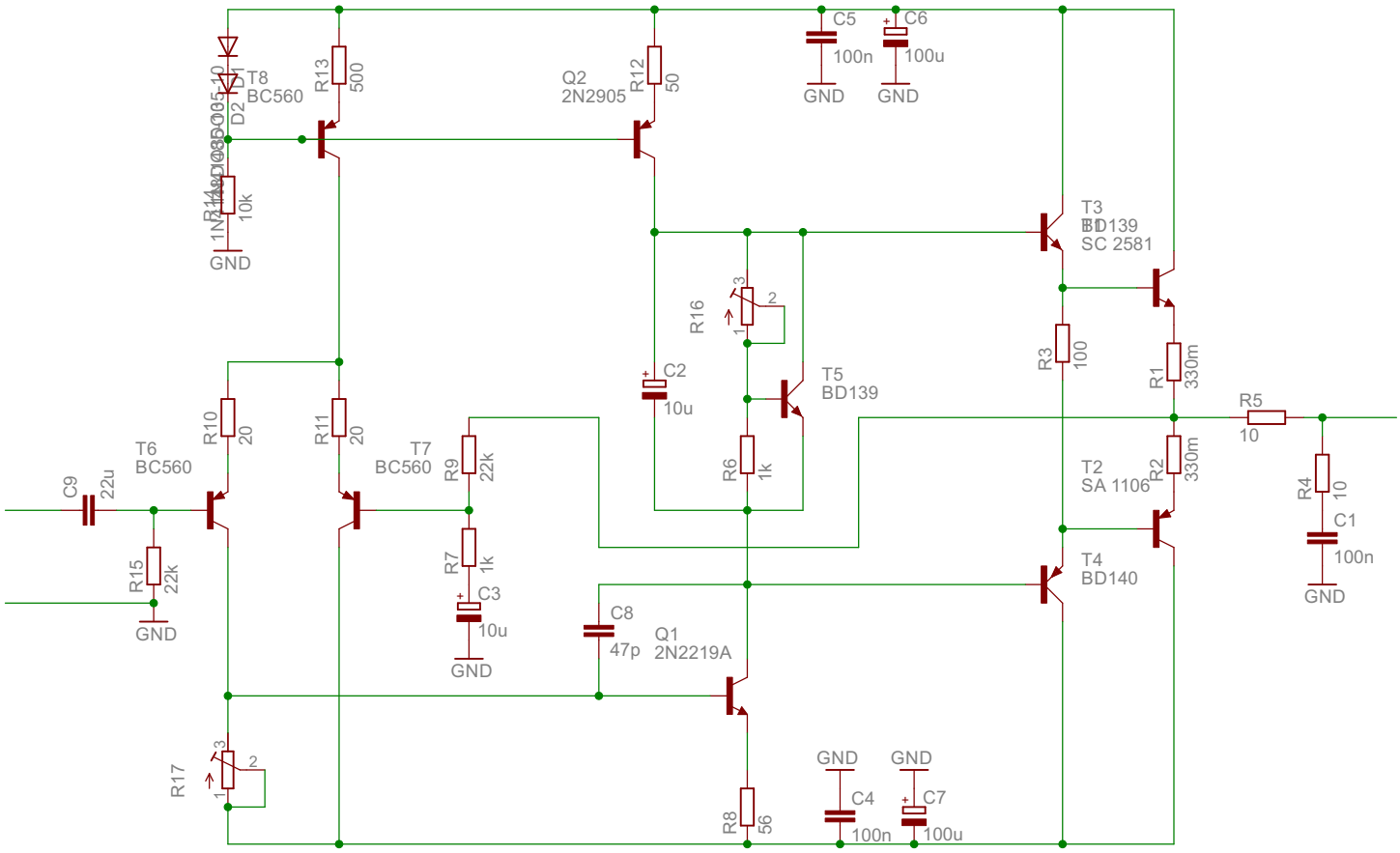

28.09.2013 13:30:42 C:\Users\Adrian\Desktop\amp.sch (Sheet: 1/1)