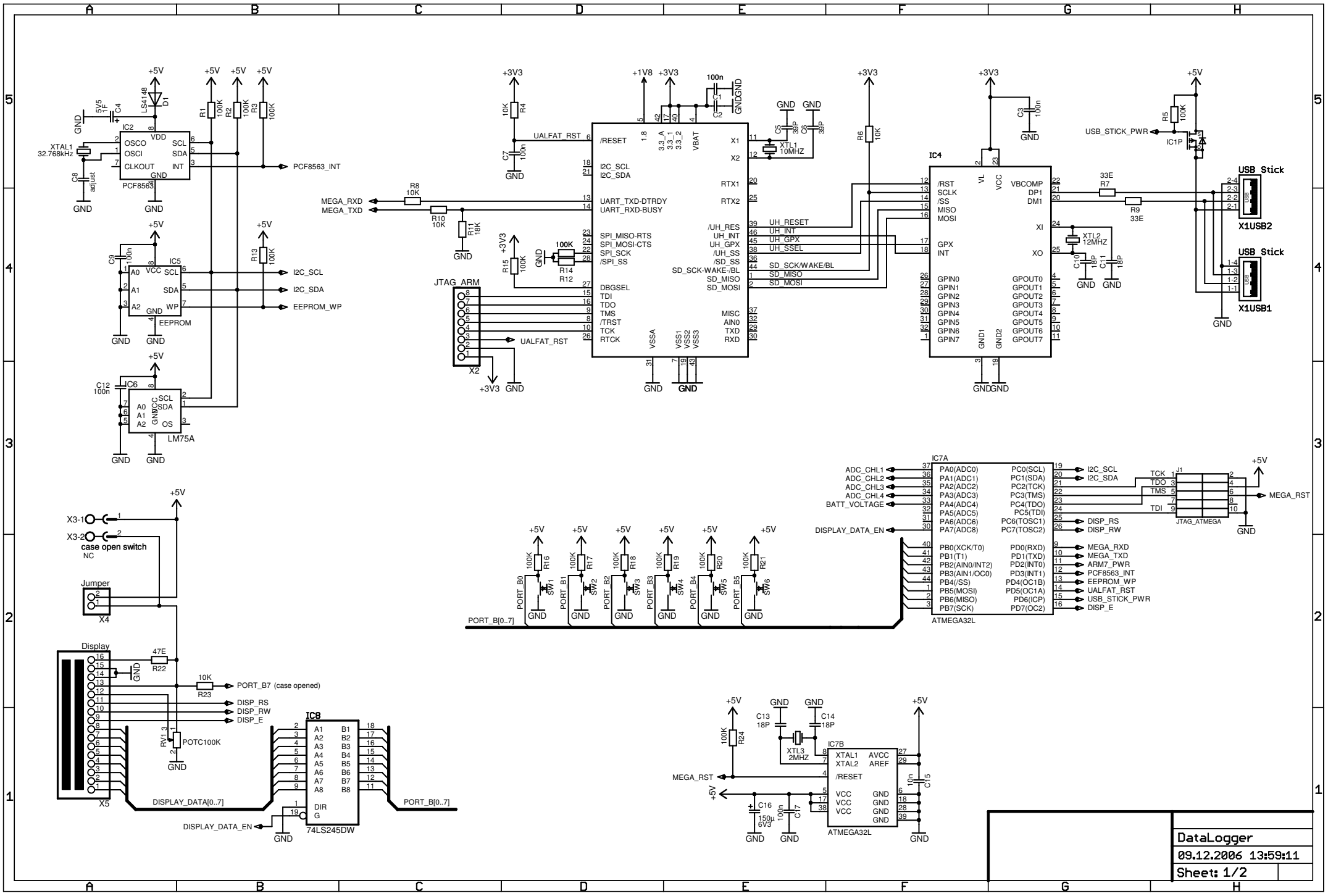
IC2
PCF8563
XTAL1
32.768kHz
C8
adjust
C4
5V5
1F
D1
LS4148
R1 100K
R2 100K
R3 100K
PCF8563_INT
IC5
EEPROM
I2C_SCL
I2C_SDA
EEPROM_WP
R13 100K
C9 100n
C12 100n
IC6
LM75A
MEGA_RXD
MEGA_TXD
R8 10K
R10 10K
R11 18K
R4 10K
C7 100n
UALFAT_RST
R15 100K
R14 100K
R12
JTAG_ARM
X2
IC1
/RESET
I2C_SCL
I2C_SDA
UART_TXD-DTRDY
UART_RXD-BUSY
SPI_MISO-RTS
SPI_MOSI-CTS
SPI_SCK
/SPI_SS
DBGSEL
TDI
TDO
TMS
/TRST
TCK
RTCK
VBAT
X1
X2
XTL1
10MHZ
C5 39P
C6 39P
C1 100n
C2
RTX1
RTX2
/UH_RES
UH_INT
UH_GPX
/UH_SS
/SD_SS
SD_SCK-WAKE-/BL
SD_MISO
SD_MOSI
MISC
AIN0
TXD
RXD
VSSA
VSS1
VSS2
VSS3
R6 10K
IC4
/RST
SCLK
/SS
MISO
MOSI
GPX
INT
GPIN0
GPIN1
GPIN2
GPIN3
GPIN4
GPIN5
GPIN6
GPIN7
VL
VCC
VBCOMP
DP1
DM1
XI
XO
XTL2
12MHZ
C10 18P
C11 18P
GPOUT0
GPOUT1
GPOUT2
GPOUT3
GPOUT4
GPOUT5
GPOUT6
GPOUT7
GND1
GND2
C3 100n
R5 100K
IC1P
USB_STICK_PWR
33E
R7
R9 33E
USB Stick
X1USB2
X1USB1
IC7A
ATMEGA32L
PA0(ADC0)
PA1(ADC1)
PA2(ADC2)
PA3(ADC3)
PA4(ADC4)
PA5(ADC5)
PA6(ADC6)
PA7(ADC8)
PB0(XCK/T0)
PB1(T1)
PB2(AIN0/INT2)
PB3(AIN1/OC0)
PB4(/SS)
PB5(MOSI)
PB6(MISO)
PB7(SCK)
PC0(SCL)
PC1(SDA)
PC2(TCK)
PC3(TMS)
PC4(TDO)
PC5(TDI)
PC6(TOSC1)
PC7(TOSC2)
PD0(RXD)
PD1(TXD)
PD2(INT0)
PD3(INT1)
PD4(OC1B)
PD5(OC1A)
PD6(ICP)
PD7(OC2)
ADC_CHL1
ADC_CHL2
ADC_CHL3
ADC_CHL4
BATT_VOLTAGE
DISPLAY_DATA_EN
DISP_RS
DISP_RW
MEGA_RXD
MEGA_TXD
ARM7_PWR
PCF8563_INT
EEPROM_WP
UALFAT_RST
USB_STICK_PWR
DISP_E
J1
JTAG_ATMEGA
TCK
TDO
TMS
TDI
MEGA_RST
R16 100K
R17 100K
R18 100K
R19 100K
R20 100K
R21 100K
SW1
SW2
SW3
SW4
SW5
SW6
PORT_B0
PORT_B1
PORT_B2
PORT_B3
PORT_B4
PORT_B5
PORT_B[0..7]
X3-1
X3-2
case open switch
NC
Jumper
X4
Display
X5
47E
R22
10K
R23
PORT_B7 (case opened)
DISP_RS
DISP_RW
DISP_E
RV1
POTC100K
DISPLAY_DATA[0..7]
DISPLAY_DATA_EN
IC8
74LS245DW
DIR
G
A1
A2
A3
A4
A5
A6
A7
A8
B1
B2
B3
B4
B5
B6
B7
B8
R24 100K
C13 18P
C14 18P
XTL3
2MHZ
IC7B
XTAL1
XTAL2
/RESET
VCC
AVCC
AREF
GND
C15 10n
C16 150µ 6V3
C17 100n
ATMEGA32L
DataLogger
09.12.2006 13:59:11
Sheet: 1/2

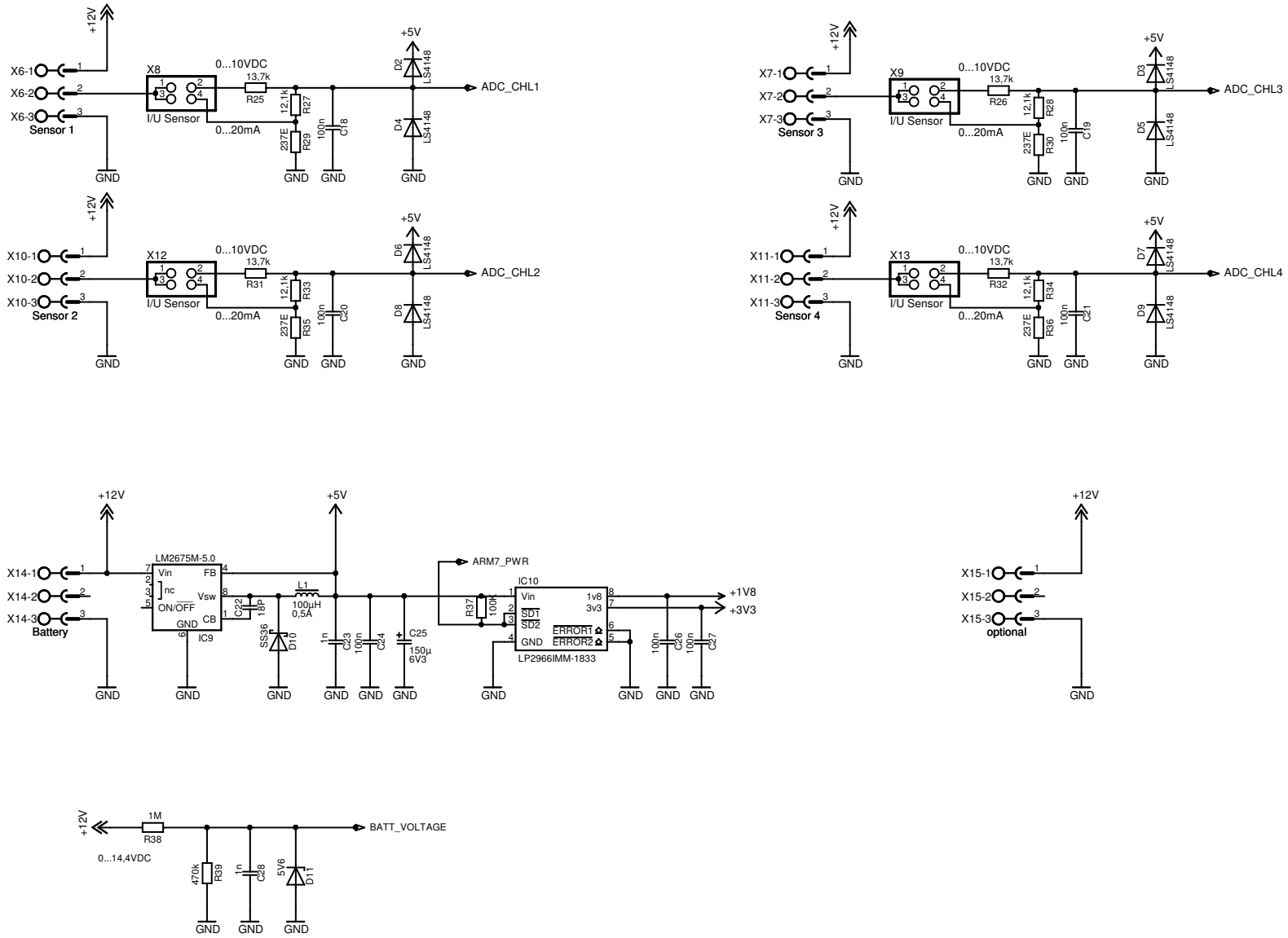

DataLogger	
09.12.2006 13:59:11	
Sheet: 2/2	