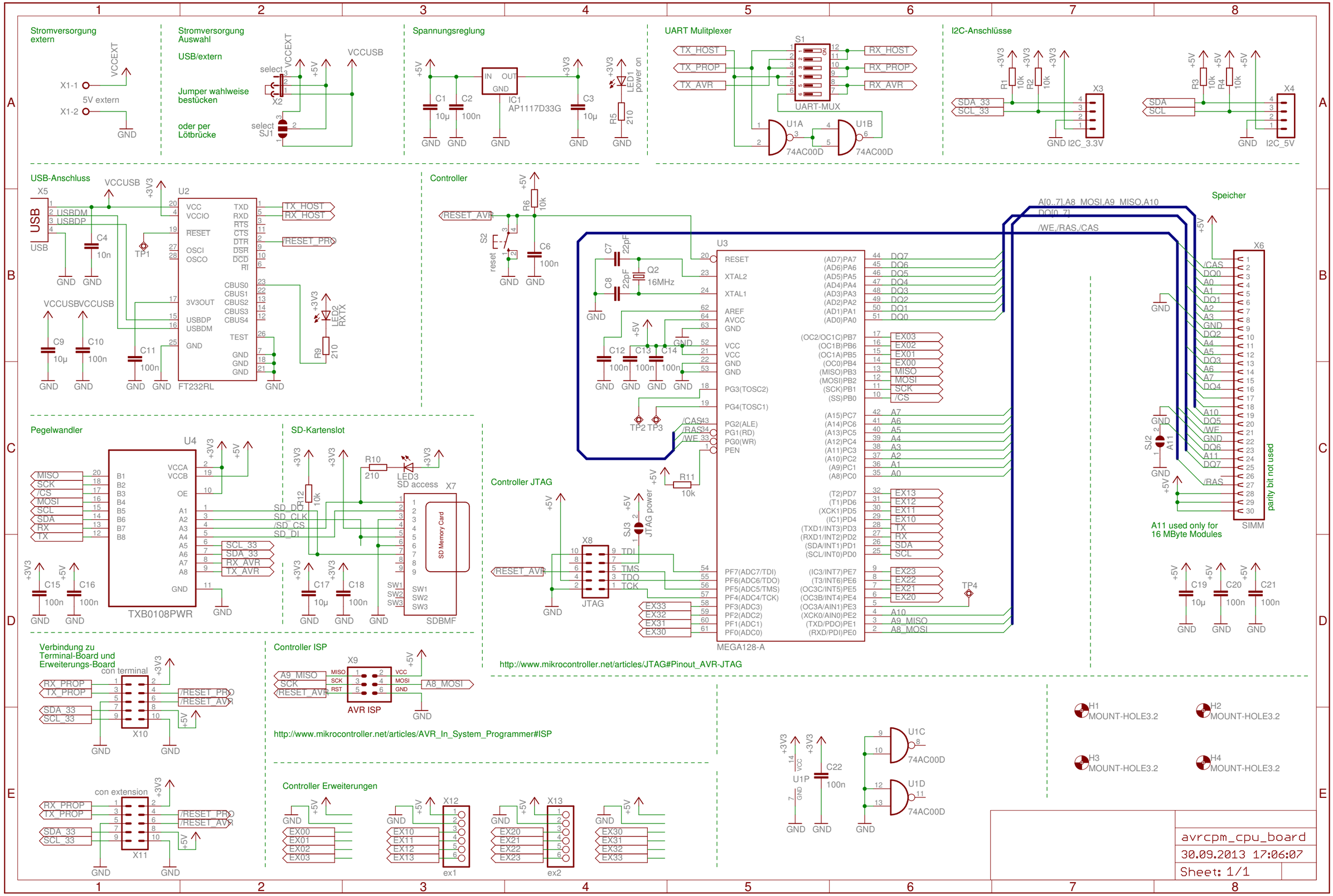
Stromversorgung extern
VCCEXT
X1-1
5V extern
X1-2
GND
Stromversorgung Auswahl
USB/extern
Jumper wahlweise bestücken
oder per Lötbrücke
select
X2
select SJ1
VCCUSB
Spannungsreglung
IC1 AP1117D33G
LED1 power on
UART Mulitplexer
TX_HOST
TX_PROP
TX_AVR
RX_HOST
RX_PROP
RX_AVR
UART-MUX
74AC00D
I2C-Anschlüsse
SDA_33
SCL_33
X3
I2C_3.3V
SDA
SCL
X4
I2C_5V
USB-Anschluss
X5
USB
USBDM
USBDP
U2
FT232RL
VCC
VCCIO
RESET
OSCI
OSCO
3V3OUT
TXD
RXD
RTS
CTS
DTR
DSR
DCD
RI
CBUS0
CBUS1
CBUS2
CBUS3
CBUS4
TEST
/RESET_PRX
LED2 RXTX
Controller
RESET_AVR
reset
U3
MEGA128-A
XTAL2
XTAL1
AREF
AVCC
Q2 16MHz
TP2 TP3
/CAS
/RAS
/WE
PG3(TOSC2)
PG4(TOSC1)
PG2(ALE)
PG1(RD)
PG0(WR)
PEN
Controller JTAG
X8
JTAG
TDI
TMS
TDO
TCK
JTAG power
TP4
http://www.mikrocontroller.net/articles/JTAG#Pinout_AVR-JTAG
Speicher
A[0..7],A8_MOSI,A9_MISO,A10
DQ[0..7]
/WE,/RAS,/CAS
X6
SIMM
parity bit not used
A11 used only for 16 MByte Modules
Pegelwandler
U4
TXB0108PWR
MISO
SCK
/CS
MOSI
SCL
SDA
RX
TX
SD-Kartenslot
X7
SD Memory Card
SDBMF
SD_DO
SD_CLK
/SD_CS
SD_DI
LED3 SD access
Verbindung zu Terminal-Board und Erweiterungs-Board
con terminal
X10
con extension
X11
Controller ISP
X9
AVR ISP
A9_MISO
A8_MOSI
http://www.mikrocontroller.net/articles/AVR_In_System_Programmer#ISP
Controller Erweiterungen
X12
X13
ex1
ex2
U1A
U1B
U1C
U1D
U1P
C22 100n
H1 MOUNT-HOLE3.2
H2 MOUNT-HOLE3.2
H3 MOUNT-HOLE3.2
H4 MOUNT-HOLE3.2
avrcpm_cpu_board
30.09.2013 17:06:07
Sheet: 1/1