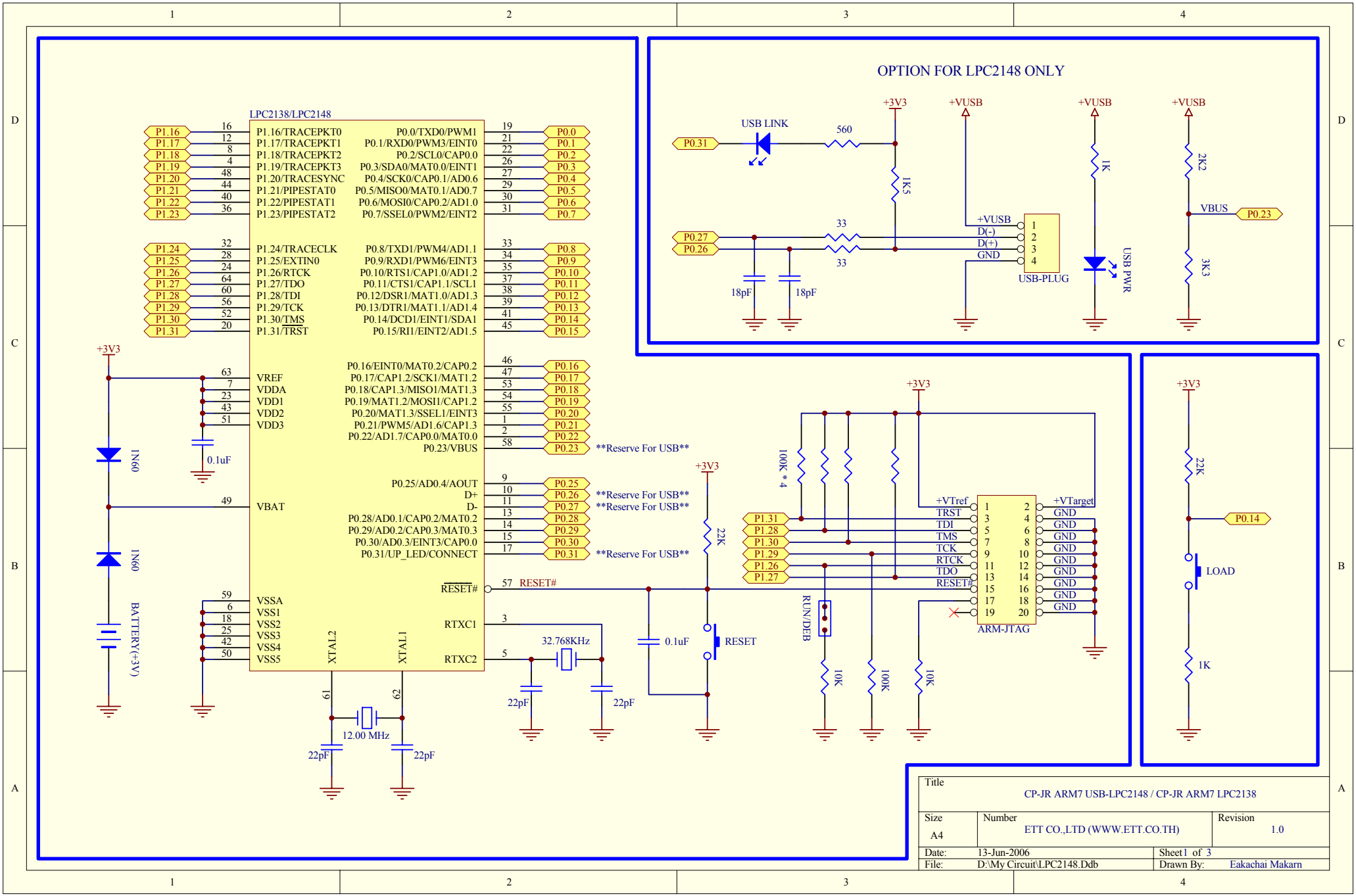
OPTION FOR LPC2148 ONLY
USB LINK
560
1K5
+3V3
+VUSB
P0.31
P0.27
P0.26
33
33
18pF
18pF
D(-)
D(+)
GND
USB-PLUG
1K
USB PWR
2K2
VBUS
P0.23
3K3
LPC2138/LPC2148
P1.16/TRACEPKT0
P1.17/TRACEPKT1
P1.18/TRACEPKT2
P1.19/TRACEPKT3
P1.20/TRACESYNC
P1.21/PIPESTAT0
P1.22/PIPESTAT1
P1.23/PIPESTAT2
P1.24/TRACECLK
P1.25/EXTIN0
P1.26/RTCK
P1.27/TDO
P1.28/TDI
P1.29/TCK
P1.30/TMS
P1.31/TRST
P0.0/TXD0/PWM1
P0.1/RXD0/PWM3/EINT0
P0.2/SCL0/CAP0.0
P0.3/SDA0/MAT0.0/EINT1
P0.4/SCK0/CAP0.1/AD0.6
P0.5/MISO0/MAT0.1/AD0.7
P0.6/MOSI0/CAP0.2/AD1.0
P0.7/SSEL0/PWM2/EINT2
P0.8/TXD1/PWM4/AD1.1
P0.9/RXD1/PWM6/EINT3
P0.10/RTS1/CAP1.0/AD1.2
P0.11/CTS1/CAP1.1/SCL1
P0.12/DSR1/MAT1.0/AD1.3
P0.13/DTR1/MAT1.1/AD1.4
P0.14/DCD1/EINT1/SDA1
P0.15/RI1/EINT2/AD1.5
P0.16/EINT0/MAT0.2/CAP0.2
P0.17/CAP1.2/SCK1/MAT1.2
P0.18/CAP1.3/MISO1/MAT1.3
P0.19/MAT1.2/MOSI1/CAP1.2
P0.20/MAT1.3/SSEL1/EINT3
P0.21/PWM5/AD1.6/CAP1.3
P0.22/AD1.7/CAP0.0/MAT0.0
P0.23/VBUS
P0.25/AD0.4/AOUT
D+
D-
P0.28/AD0.1/CAP0.2/MAT0.2
P0.29/AD0.2/CAP0.3/MAT0.3
P0.30/AD0.3/EINT3/CAP0.0
P0.31/UP_LED/CONNECT
VREF
VDDA
VDD1
VDD2
VDD3
VBAT
VSSA
VSS1
VSS2
VSS3
VSS4
VSS5
RESET#
RTXC1
RTXC2
XTAL2
XTAL1
Reserve For USB
0.1uF
1N60
1N60
BATTERY(+3V)
12.00 MHz
22pF
22pF
32.768KHz
22pF
22pF
0.1uF
RESET
22K
100K * 4
RUN/DEB
10K
100K
10K
+VTref
+VTarget
TRST
TDI
TMS
TCK
RTCK
TDO
RESET#
ARM-JTAG
22K
P0.14
LOAD
1K
Title
CP-JR ARM7 USB-LPC2148 / CP-JR ARM7 LPC2138
Size
A4
Number
ETT CO.,LTD (WWW.ETT.CO.TH)
Revision
1.0
Date:
13-Jun-2006
Sheet1 of 3
File:
D:\My Circuit\LPC2148.Ddb
Drawn By:
Eakachai Makarn