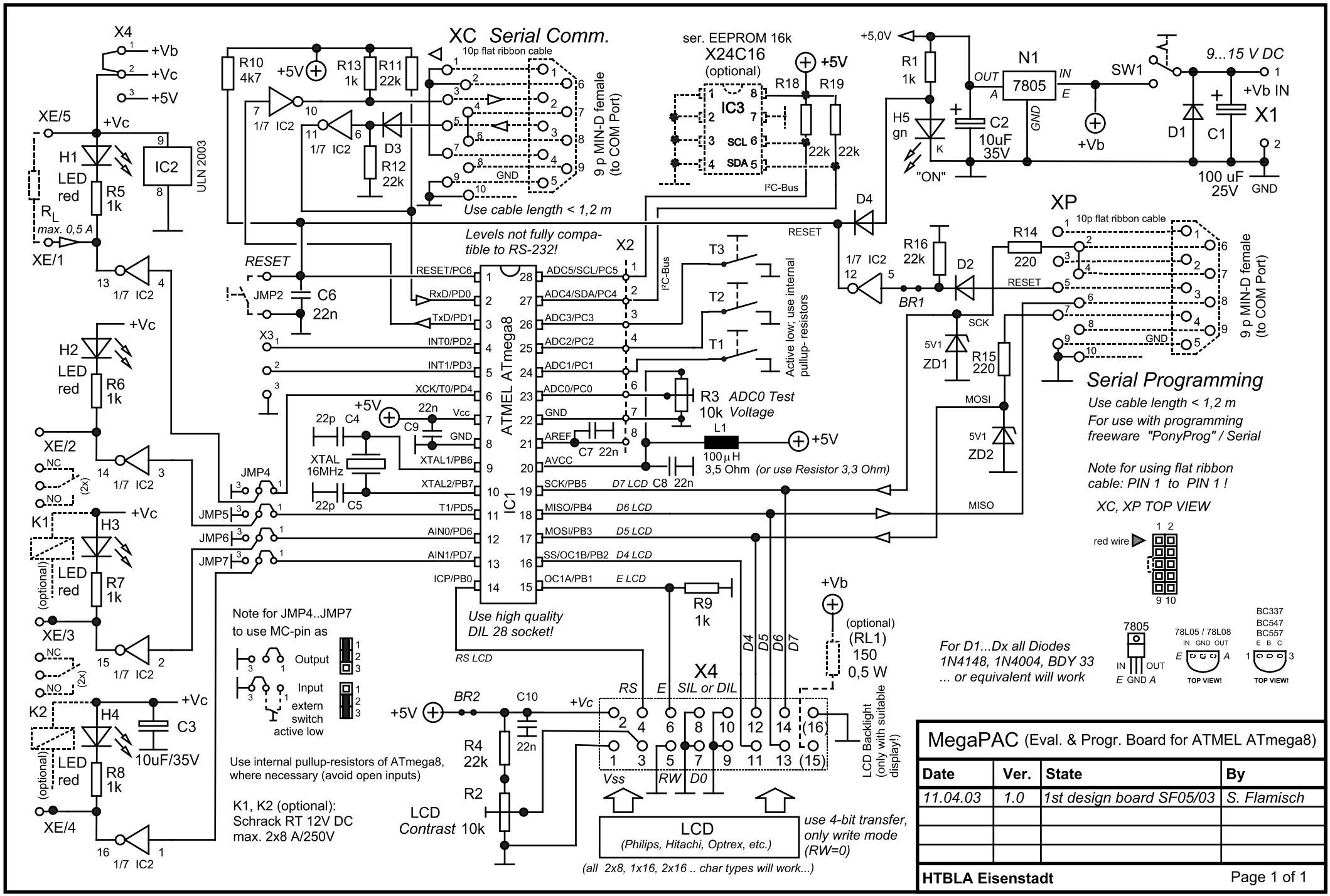
XC Serial Comm.
10p flat ribbon cable
9 p MIN-D female (to COM Port)
Use cable length < 1,2 m
Levels not fully compatible to RS-232!
ser. EEPROM 16k
X24C16
(optional)
IC3
SCL
SDA
I²C-Bus
+5,0V
N1
7805
OUT
IN
GND
SW1
9...15 V DC
+Vb IN
X1
100 uF 25V
GND
D1
C1
C2 10uF 35V
+Vb
H5 gn
"ON"
D4
RESET
XP
10p flat ribbon cable
9 p MIN-D female (to COM Port)
R14 220
R16 22k
D2
BR1
SCK
MOSI
MISO
ZD1 5V1
ZD2 5V1
R15 220
Serial Programming
Use cable length < 1,2 m
For use with programming freeware "PonyProg" / Serial
Note for using flat ribbon cable: PIN 1 to PIN 1 !
XC, XP TOP VIEW
red wire
X4
+Vb
+Vc
+5V
XE/5
XE/1
XE/2
XE/3
XE/4
H1 LED red
R5 1k
IC2 ULN 2003
R10 4k7
R13 1k
R11 22k
R12 22k
D3
1/7 IC2
RESET
JMP2
C6 22n
X3
H2 LED red
R6 1k
H3 LED red
R7 1k
H4 LED red
R8 1k
K1
K2
(optional)
NC
NO
(2x)
C3 10uF/35V
JMP4
JMP5
JMP6
JMP7
ATMEL ATmega8
IC1
RESET/PC6
RxD/PD0
TxD/PD1
INT0/PD2
INT1/PD3
XCK/T0/PD4
Vcc
GND
XTAL1/PB6
XTAL2/PB7
T1/PD5
AIN0/PD6
AIN1/PD7
ICP/PB0
ADC5/SCL/PC5
ADC4/SDA/PC4
ADC3/PC3
ADC2/PC2
ADC1/PC1
ADC0/PC0
AREF
AVCC
SCK/PB5
MISO/PB4
MOSI/PB3
SS/OC1B/PB2
OC1A/PB1
22p C4
C9 22n
XTAL 16MHz
22p C5
X2
I²C-Bus
T3
T2
T1
Active low; use internal pullup- resistors
R3 10k
ADC0 Test Voltage
L1 100µH 3,5 Ohm
(or use Resistor 3,3 Ohm)
C7 22n
C8 22n
D7 LCD
D6 LCD
D5 LCD
D4 LCD
E LCD
R9 1k
Use high quality DIL 28 socket!
RS LCD
Note for JMP4..JMP7 to use MC-pin as
Output
Input
extern switch active low
Use internal pullup-resistors of ATmega8, where necessary (avoid open inputs)
K1, K2 (optional): Schrack RT 12V DC max. 2x8 A/250V
BR2
C10 22n
R4 22k
R2 LCD Contrast 10k
X4
SIL or DIL
RS
E
D4
D5
D6
D7
Vss
RW
D0
LCD Backlight (only with suitable display!)
LCD
(Philips, Hitachi, Optrex, etc.)
use 4-bit transfer, only write mode (RW=0)
(all 2x8, 1x16, 2x16 .. char types will work...)
+Vb
(optional)
(RL1) 150 0,5 W
For D1...Dx all Diodes 1N4148, 1N4004, BDY 33 ... or equivalent will work
7805
IN GND OUT
E GND A
78L05 / 78L08
IN GND OUT
E A
TOP VIEW!
BC337
BC547
BC557
E B C
1 3
TOP VIEW!
MegaPAC (Eval. & Progr. Board for ATMEL ATmega8)
Date
Ver.
State
By
11.04.03
1.0
1st design board SF05/03
S. Flamisch
HTBLA Eisenstadt
Page 1 of 1