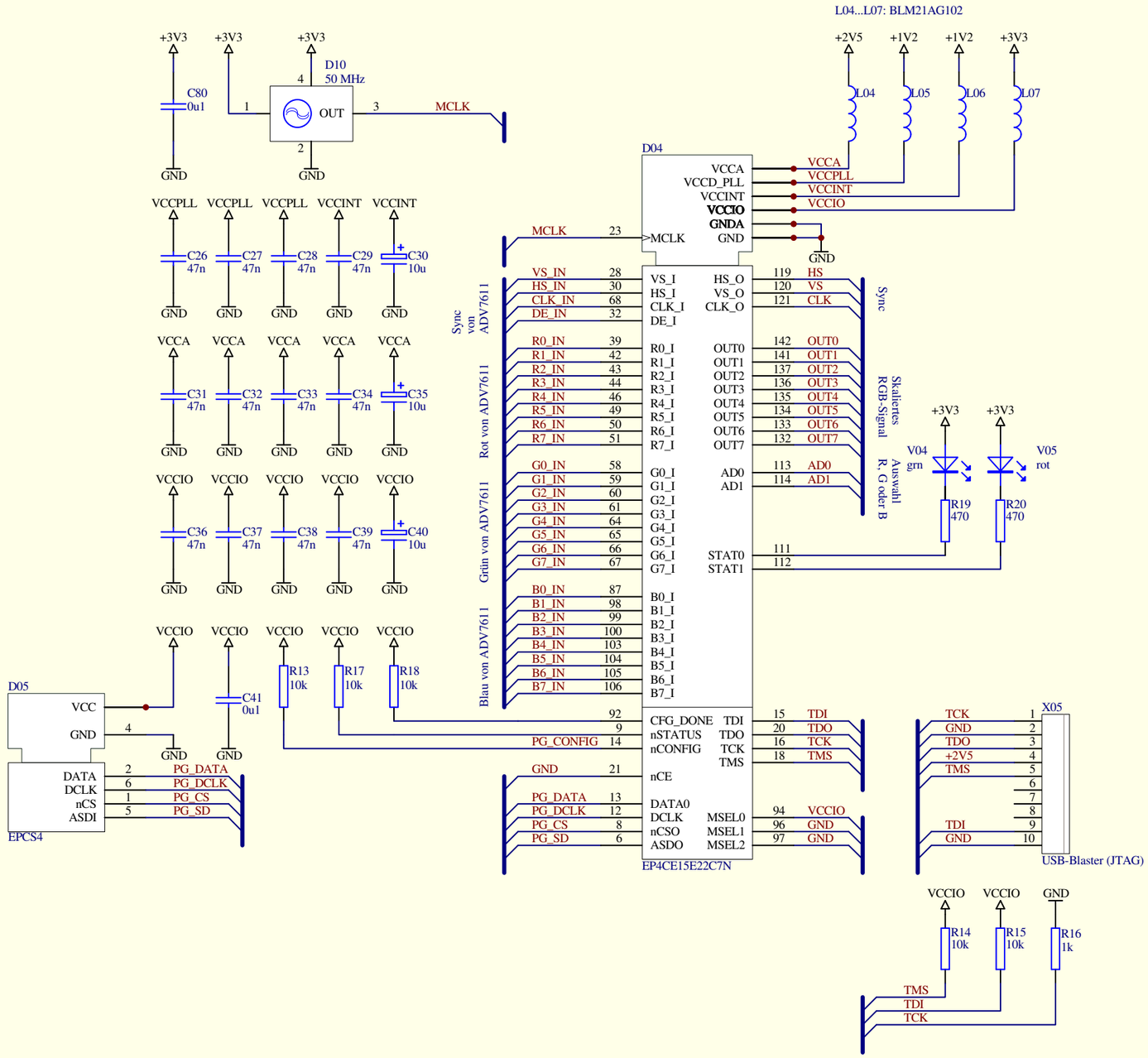

Title		
Size B	Number	Revision
Date: 17-Feb-2014	Sheet of	
File: P:\#\Protel Files\Ambilight.ddb	Drawn By:	