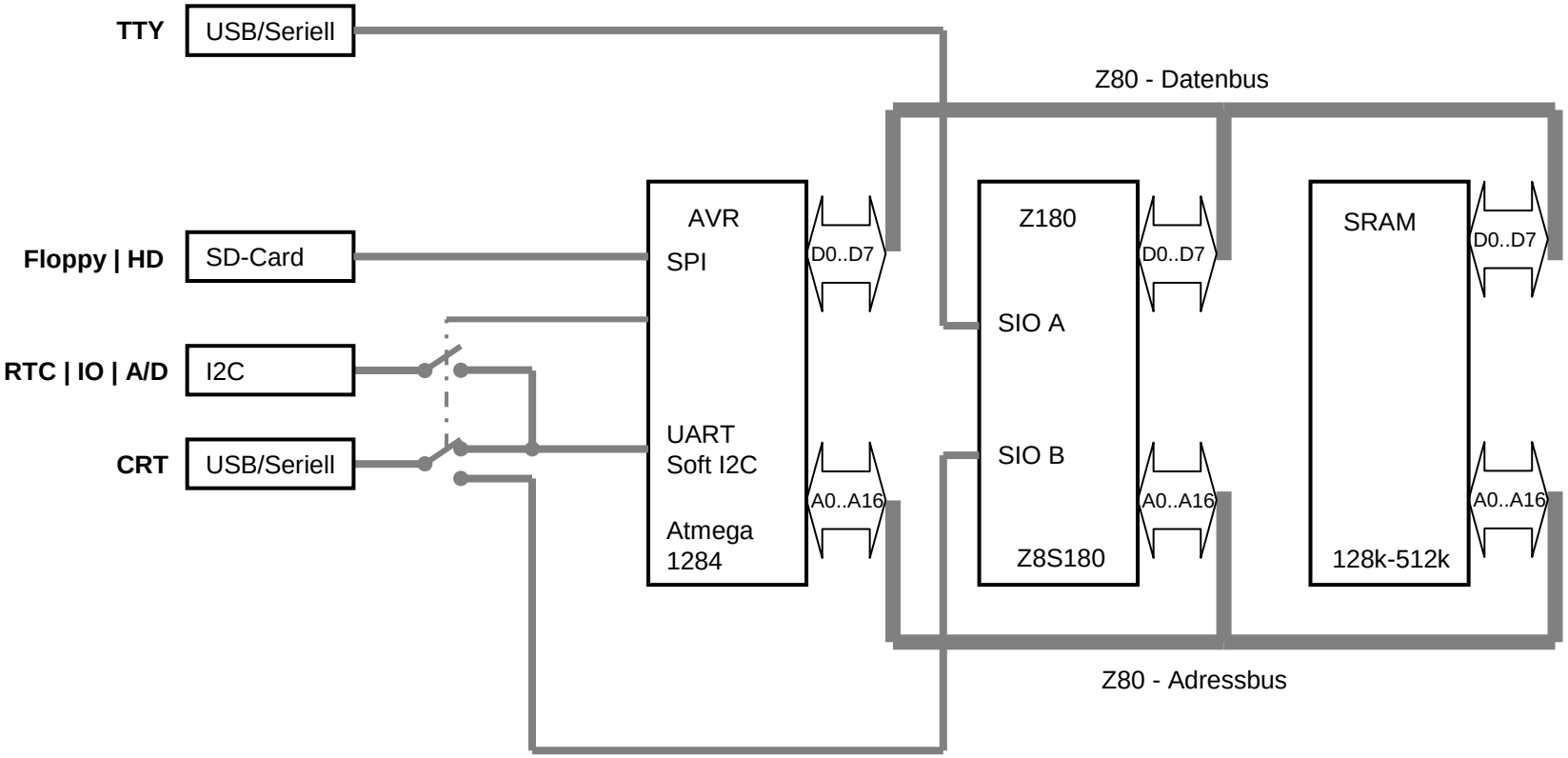
TTY
USB/Seriell
Floppy | HD
SD-Card
RTC | IO | A/D
I2C
CRT
USB/Seriell
AVR
SPI
UART
Soft I2C
Atmega
1284
D0..D7
A0..A16
Z80 - Datenbus
Z180
SIO A
SIO B
Z8S180
D0..D7
A0..A16
SRAM
128k-512k
D0..D7
A0..A16
Z80 - Adressbus