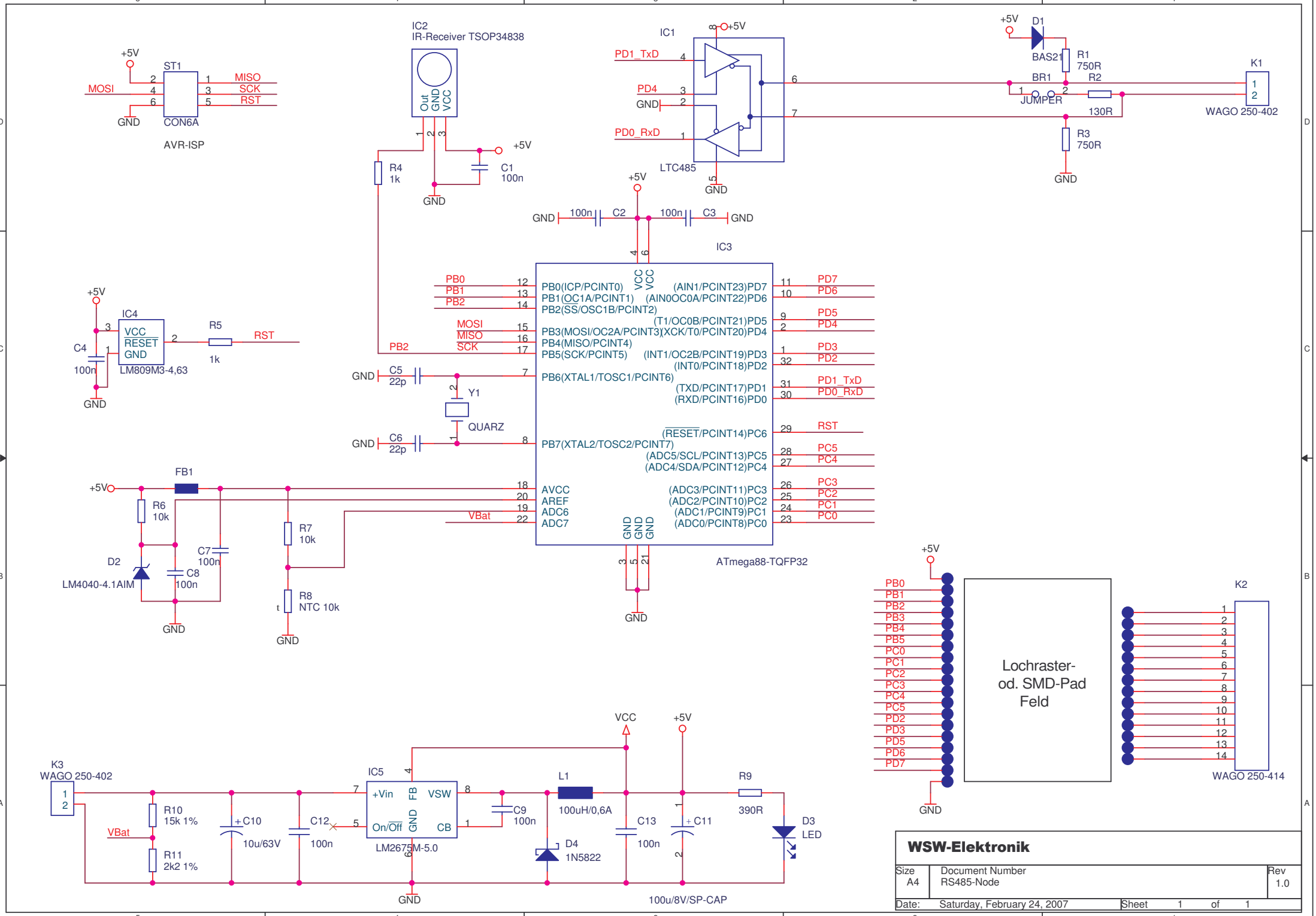
ST1
CON6A
AVR-ISP
MOSI
MISO
SCK
RST
GND
+5V
IC2
IR-Receiver TSOP34838
Out
GND
VCC
R4
1k
C1
100n
IC1
LTC485
PD1_TxD
PD4
PD0_RxD
D1
BAS21
R1
750R
R2
130R
R3
750R
BR1
JUMPER
K1
WAGO 250-402
C2
100n
C3
100n
IC3
ATmega88-TQFP32
PB0(ICP/PCINT0)
PB1(OC1A/PCINT1)
PB2(SS/OSC1B/PCINT2)
PB3(MOSI/OC2A/PCINT3)
PB4(MISO/PCINT4)
PB5(SCK/PCINT5)
PB6(XTAL1/TOSC1/PCINT6)
PB7(XTAL2/TOSC2/PCINT7)
(AIN1/PCINT23)PD7
(AIN0OC0A/PCINT22)PD6
(T1/OC0B/PCINT21)PD5
(XCK/T0/PCINT20)PD4
(INT1/OC2B/PCINT19)PD3
(INT0/PCINT18)PD2
(TXD/PCINT17)PD1
(RXD/PCINT16)PD0
(RESET/PCINT14)PC6
(ADC5/SCL/PCINT13)PC5
(ADC4/SDA/PCINT12)PC4
(ADC3/PCINT11)PC3
(ADC2/PCINT10)PC2
(ADC1/PCINT9)PC1
(ADC0/PCINT8)PC0
AVCC
AREF
ADC6
ADC7
VBat
C5
22p
C6
22p
Y1
QUARZ
IC4
LM809M3-4,63
VCC
RESET
GND
C4
100n
R5
1k
FB1
R6
10k
R7
10k
R8
NTC 10k
D2
LM4040-4.1AIM
C7
100n
C8
100n
K2
WAGO 250-414
Lochraster-
od. SMD-Pad
Feld
K3
WAGO 250-402
R10
15k 1%
R11
2k2 1%
C10
10u/63V
C12
100n
IC5
LM2675M-5.0
+Vin
FB
VSW
On/Off
GND
CB
C9
100n
L1
100uH/0,6A
D4
1N5822
C13
100n
C11
100u/8V/SP-CAP
R9
390R
D3
LED
VCC
WSW-Elektronik
Size
A4
Document Number
RS485-Node
Rev
1.0
Date:
Saturday, February 24, 2007
Sheet
1
of
1