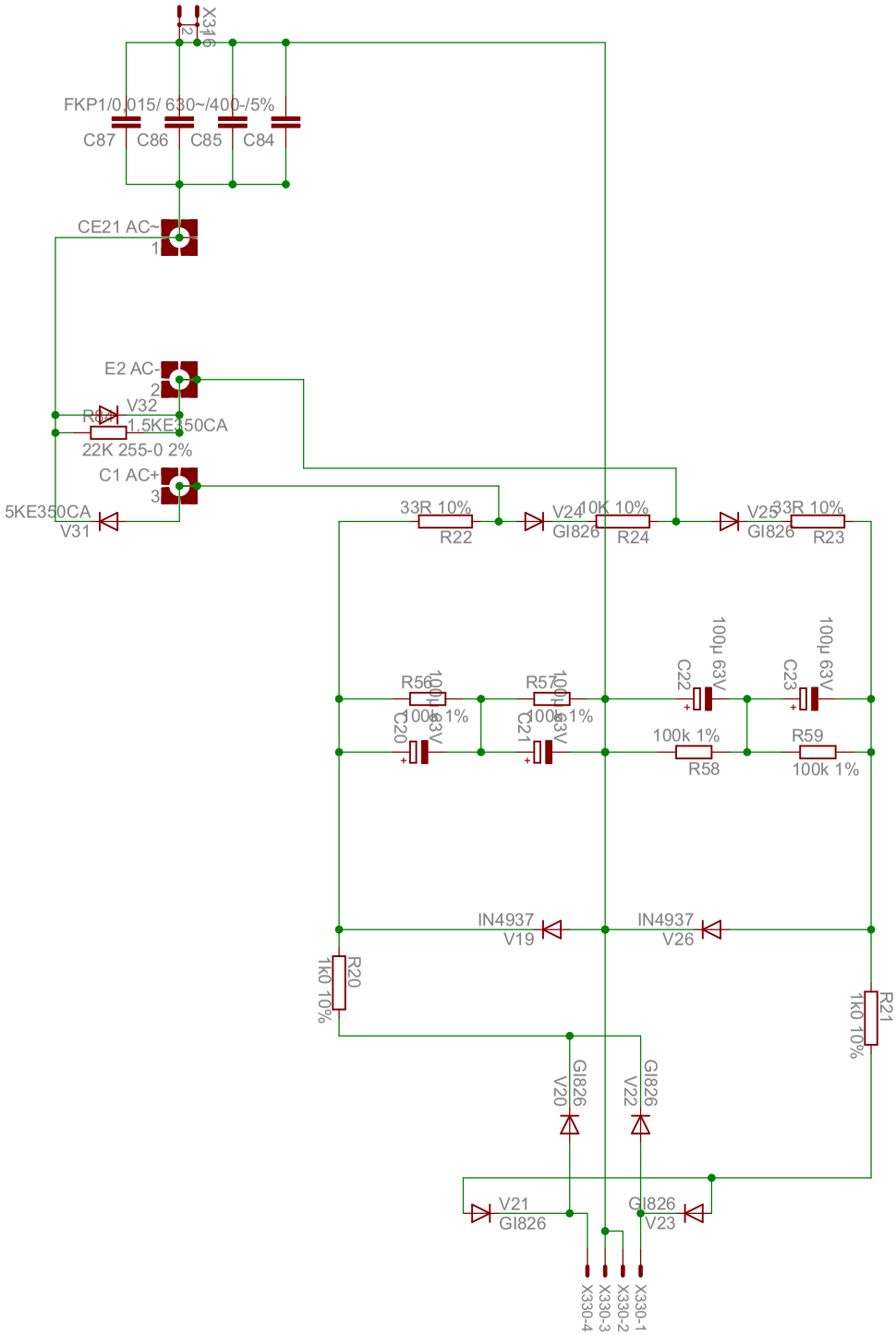
X316
2
FKP1/0.015/ 630~/400-/5%
C87
C86
C85
C84
CE21 AC~
1
E2 AC-
2
V32
1.5KE350CA
22K 255-0 2%
C1 AC+
3
5KE350CA
V31
33R 10%
R22
V24
GI826
10K 10%
R24
V25
GI826
33R 10%
R23
100µ 63V
C22
100µ 63V
C23
R56
100k 1%
C20
R57
100k 1%
C21
100k 1%
R58
R59
100k 1%
IN4937
V19
IN4937
V26
R20
1k0 10%
R21
1k0 10%
GI826
V20
GI826
V22
V21
GI826
GI826
V23
X330-4
X330-3
X330-2
X330-1