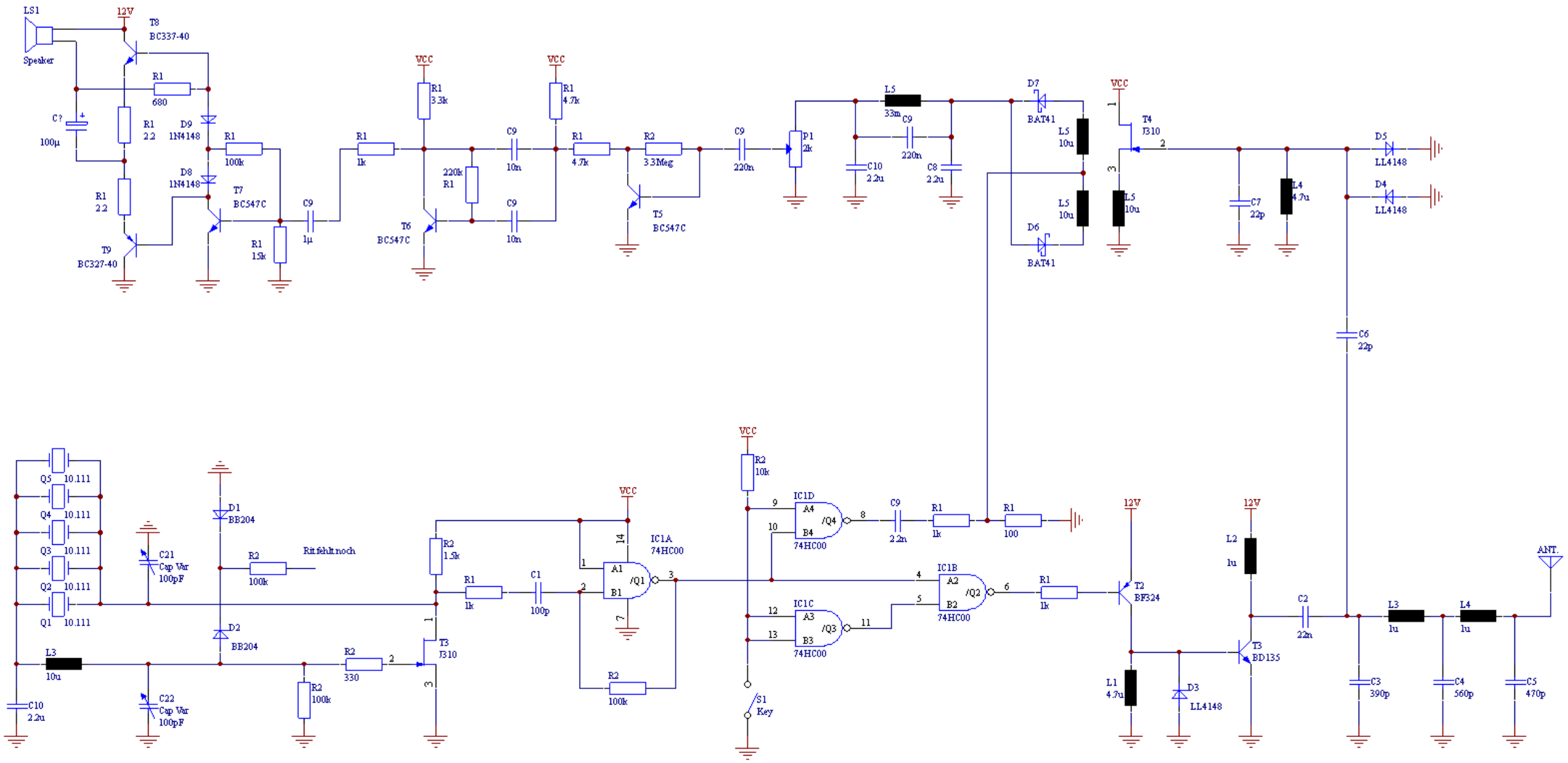
LS1
Speaker
12V
T8
BC337-40
R1
680
C?
100µ
R1
2.2
D9
1N4148
R1
100k
D8
1N4148
T7
BC547C
R1
2.2
T9
BC327-40
R1
15k
C9
1µ
R1
1k
VCC
R1
3.3k
220k
R1
T6
BC547C
C9
10n
C9
10n
VCC
R1
4.7k
R1
4.7k
R2
3.3Meg
T5
BC547C
C9
220n
P1
2k
L5
33m
C9
220n
C10
2.2u
C8
2.2u
D7
BAT41
L5
10u
L5
10u
D6
BAT41
VCC
T4
J310
L5
10u
C7
22p
L4
4.7u
D5
LL4148
D4
LL4148
C6
22p
Q5 10.111
Q4 10.111
Q3 10.111
Q2 10.111
Q1 10.111
L3
10u
C10
2.2u
C21
Cap Var
100pF
C22
Cap Var
100pF
D1
BB204
D2
BB204
R2
100k
Rit fehlt noch
R2
100k
R2
330
R2
1.5k
T3
J310
R1
1k
C1
100p
VCC
IC1A
74HC00
R2
100k
VCC
R2
10k
IC1D
74HC00
IC1C
74HC00
S1
Key
C9
2.2n
R1
1k
R1
100
IC1B
74HC00
R1
1k
12V
T2
BF324
L1
4.7u
D3
LL4148
12V
L2
1u
T3
BD135
C2
22n
L3
1u
L4
1u
ANT.
C3
390p
C4
560p
C5
470p