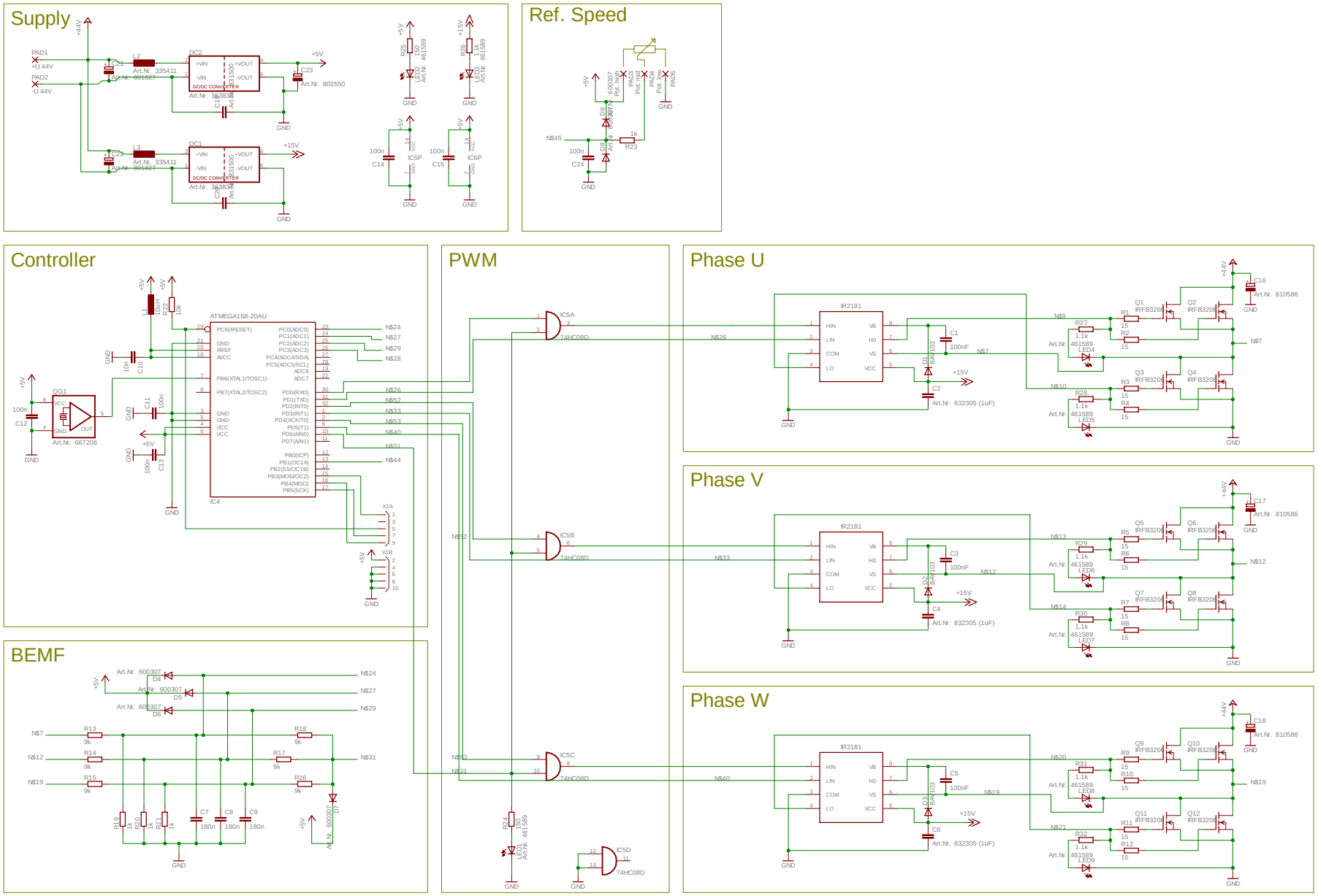
Supply
Ref. Speed
Controller
PWM
Phase U
Phase V
Phase W
BEMF
ATMEGA168-20AU
IR2181
74HC08D
IRFB3206
BAV103
Art.Nr. 832305 (1uF)
Art.Nr. 810586
Art.Nr. 461589
Art.Nr. 667206
Art.Nr. 335411
Art.Nr. 802550
Art.Nr. 600307
GND
+44V
+15V
+5V