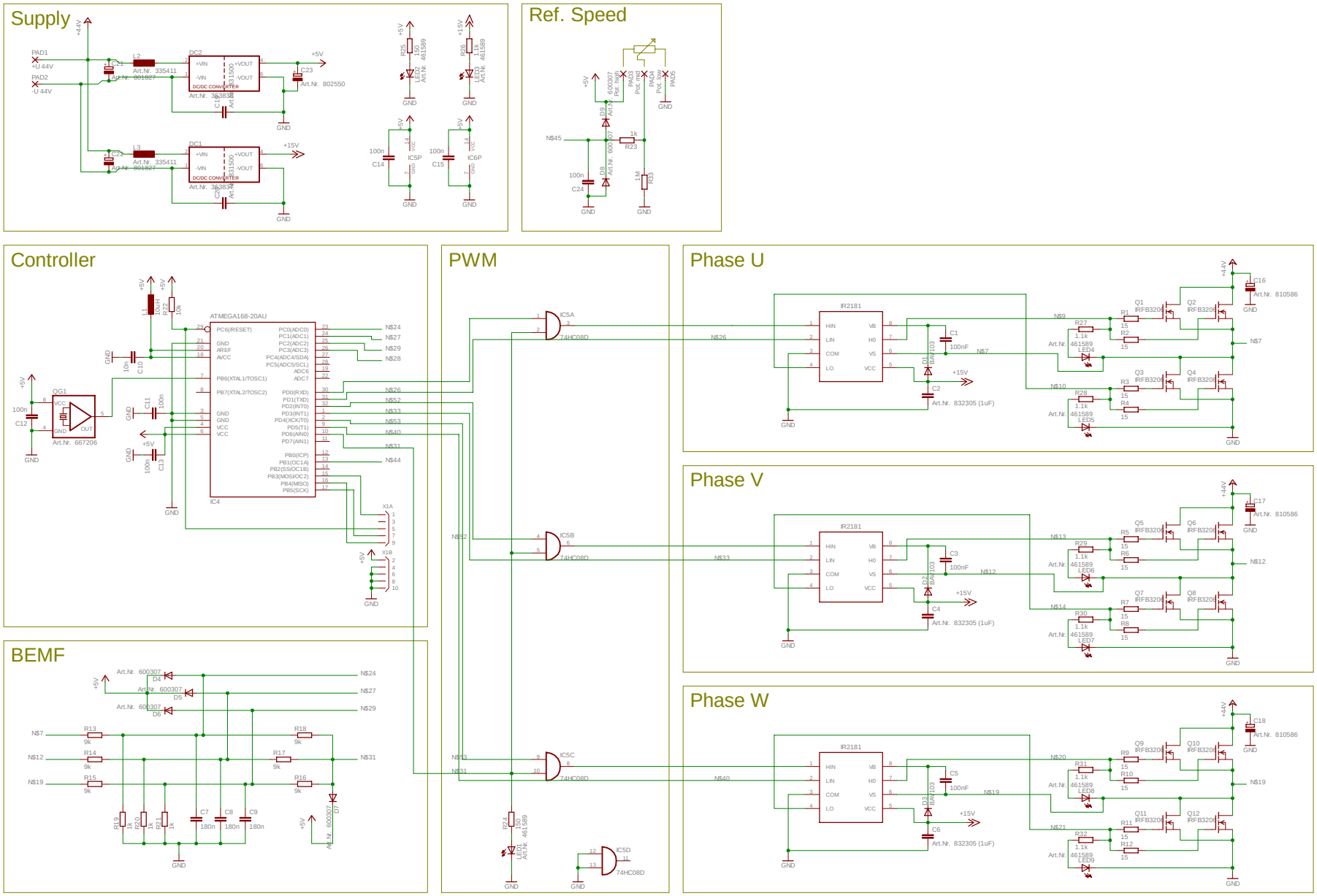
Supply
Ref. Speed
Controller
PWM
Phase U
Phase V
Phase W
BEMF
ATMEGA168-20AU
IR2181
74HC08D
DC/DC CONVERTER