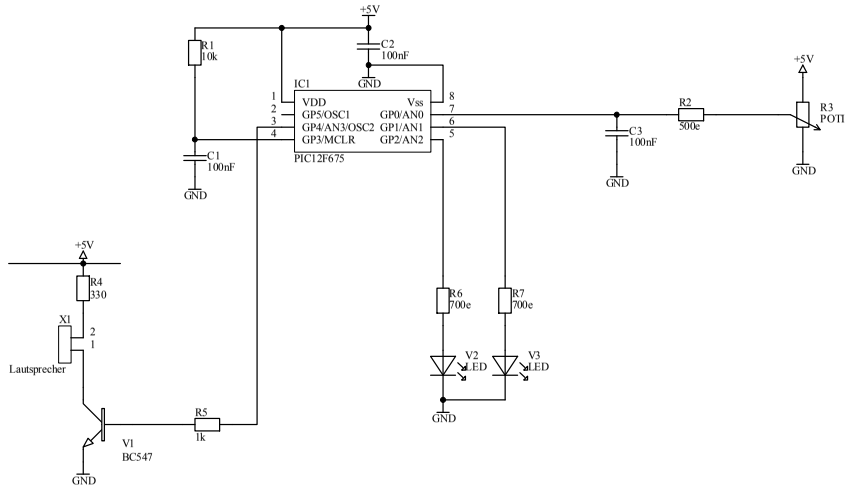

Title		
Size B	Number	Revision
Date: 16-Apr-2007	Sheet of	
File: D:\Hardware\Fan\Fan.ddb	Drawn By:	