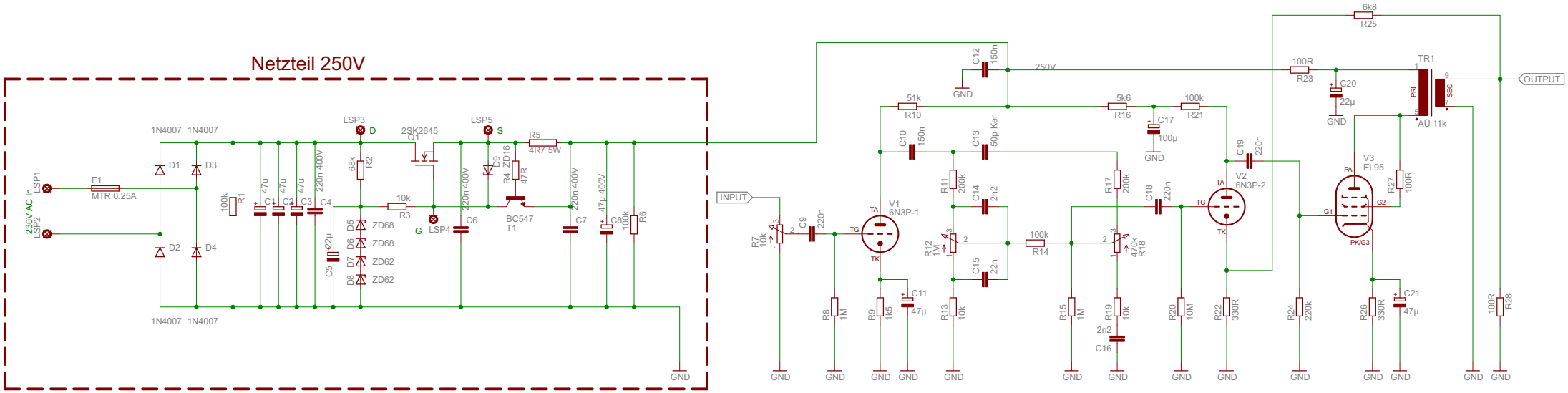
Netzteil 250V
230V AC In
LSP1
LSP2
F1
MTR 0.25A
1N4007
D1
D2
D3
D4
100k
R1
47u
C1
C2
C3
C4
220n 400V
22µ
C5
68k
R2
LSP3
D
2SK2645
Q1
10k
R3
G
LSP4
220n 400V
C6
LSP5
S
D9
ZD16
R4
47R
R5
4R7 5W
BC547
T1
220n 400V
C7
47µ 400V
C8
100k
R6
D5
D6
D7
D8
ZD68
ZD68
ZD62
ZD62
GND
INPUT
R7
10k
C9
220n
V1
6N3P-1
TA
TG
TK
R8
1M
R9
1k5
C11
47µ
51k
R10
C10
150n
C12
150n
250V
R11
200k
C14
2n2
C13
50p Ker
R12
1M
C15
22n
100k
R14
R13
10k
5k6
R16
C17
100µ
100k
R21
R17
200k
R18
470k
C18
220n
R15
1M
R19
10k
2n2
C16
V2
6N3P-2
C19
220n
R20
10M
R22
330R
100R
R23
C20
22µ
6k8
R25
R24
220k
TR1
PRI
SEC
AÜ 11k
V3
EL95
PA
G1
G2
PK/G3
R27
100R
R26
330R
C21
47µ
100R
R28
OUTPUT