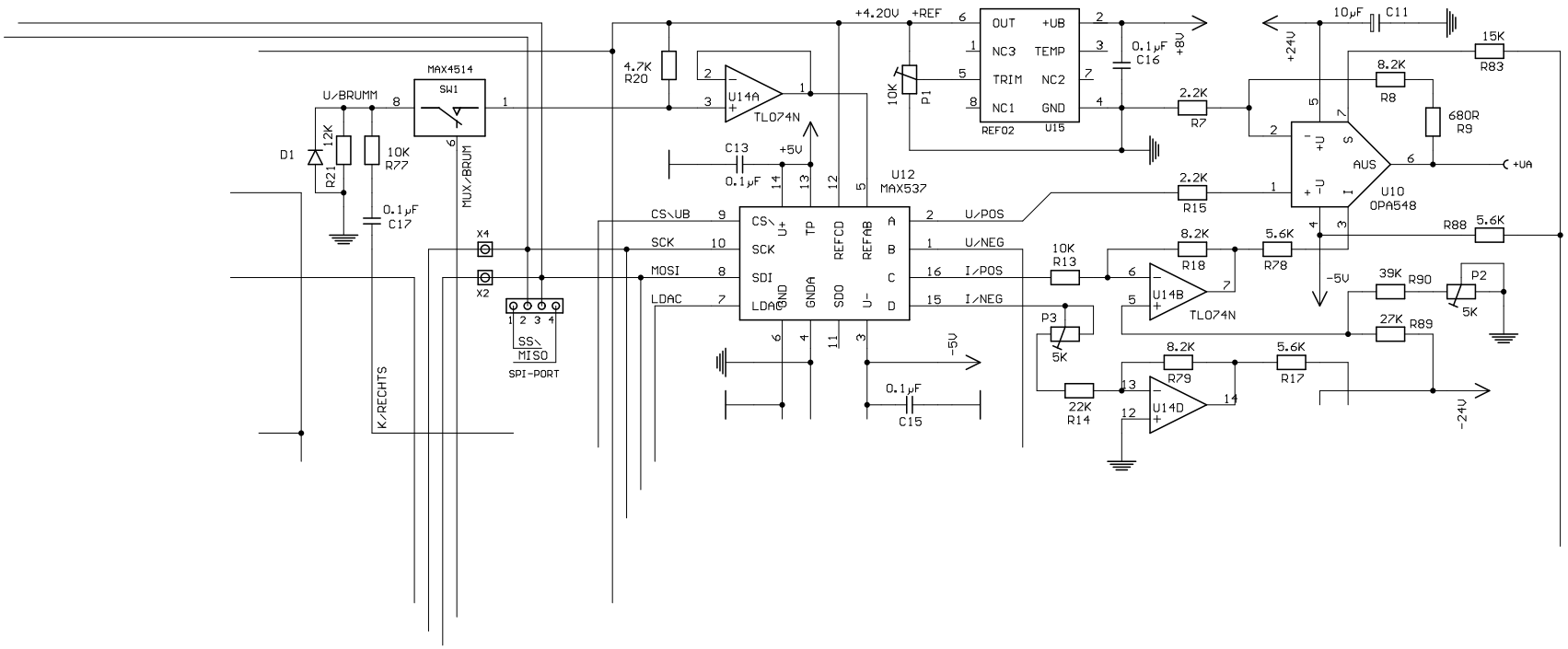
U/BRUMM
MAX4514
SW1
D1
12K
R21
10K
R77
0.1µF
C17
MUX/BRUM
K/RECHTS
X4
X2
SS\
MISO
SPI-PORT
4.7K
R20
U14A
TL074N
C13
0.1µF
+5V
CS\UB
SCK
MOSI
LDAC
CS\
SCK
SDI
LDAC
U+
TP
GND
GNDA
REFCD
SDO
REFAB
U-
A
B
C
D
U12
MAX537
U/POS
U/NEG
I/POS
I/NEG
-5V
0.1µF
C15
+4.20V
+REF
10K
P1
OUT
NC3
TRIM
NC1
+UB
TEMP
NC2
GND
REF02
U15
0.1µF
C16
+8V
2.2K
R7
2.2K
R15
10K
R13
P3
5K
22K
R14
8.2K
R18
5.6K
R78
U14B
TL074N
8.2K
R79
5.6K
R17
U14D
+24V
10µF
C11
15K
R83
8.2K
R8
680R
R9
+U
-U
S
AUS
U10
OPA548
+UA
R88
5.6K
-5V
39K
R90
P2
5K
27K
R89
-24V