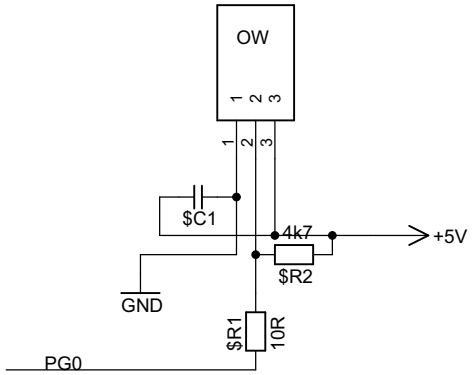
OW
1
2
3
1
2
3
$C1
4k7
+5V
$R2
GND
$R1
10R
PG0