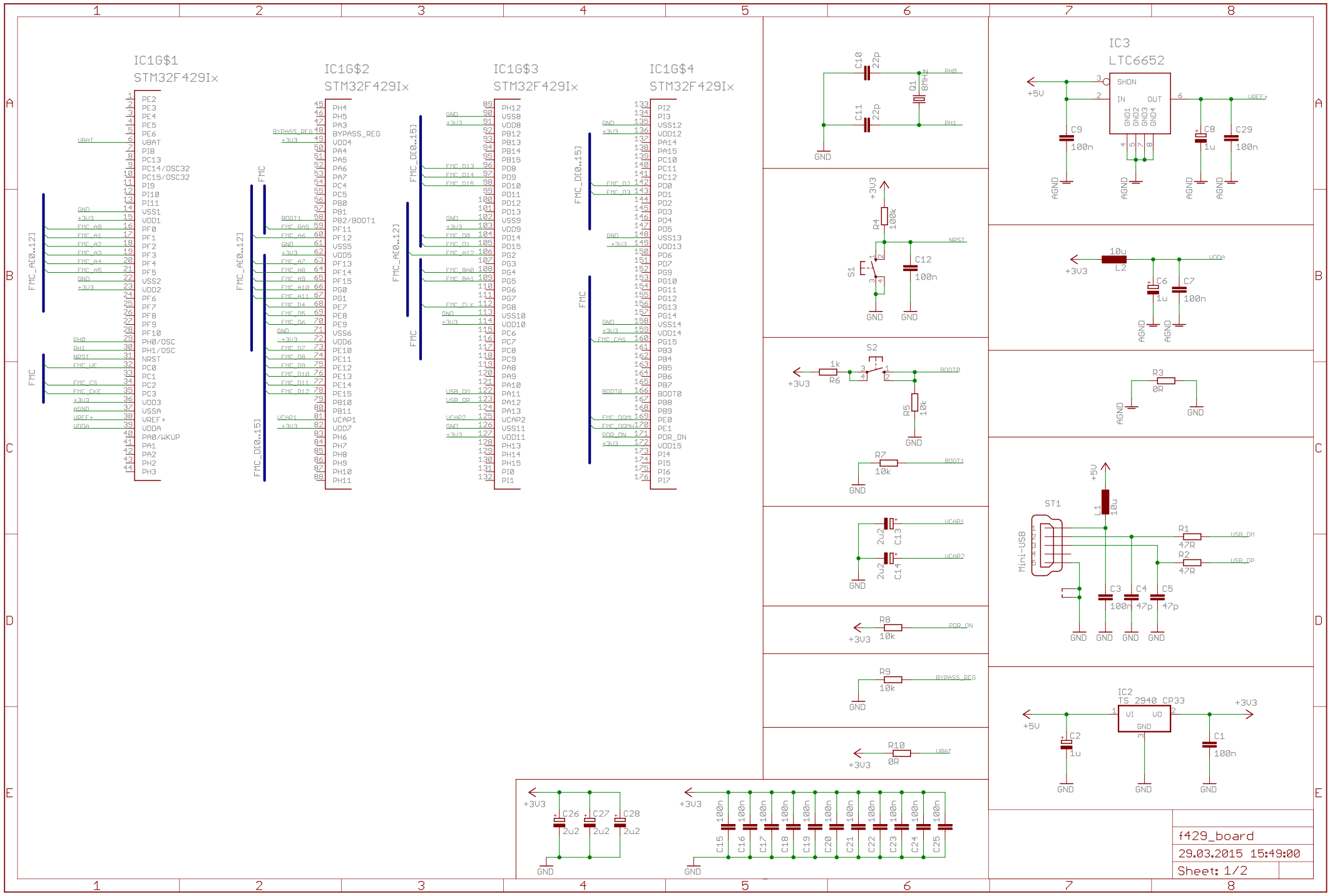
IC1G$1
STM32F429Ix
IC1G$2
STM32F429Ix
IC1G$3
STM32F429Ix
IC1G$4
STM32F429Ix
IC3
LTC6652
SHDN
IN
OUT
GND1
GND2
GND3
GND4
IC2
TS 2940 CP33
VI
VO
GND
ST1
Mini-USB
f429_board
29.03.2015 15:49:00
Sheet: 1/2

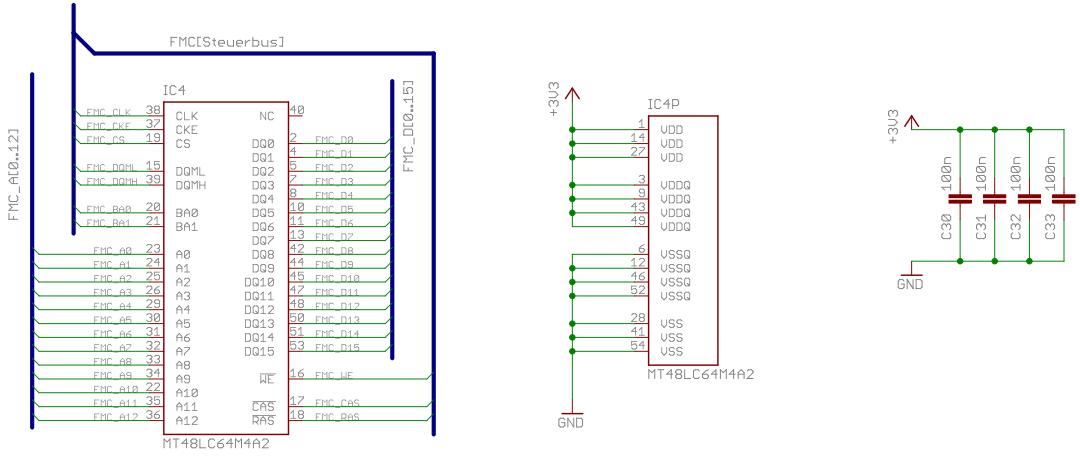

f429_board

29.03.2015 15:49:00

Sheet: 2/2