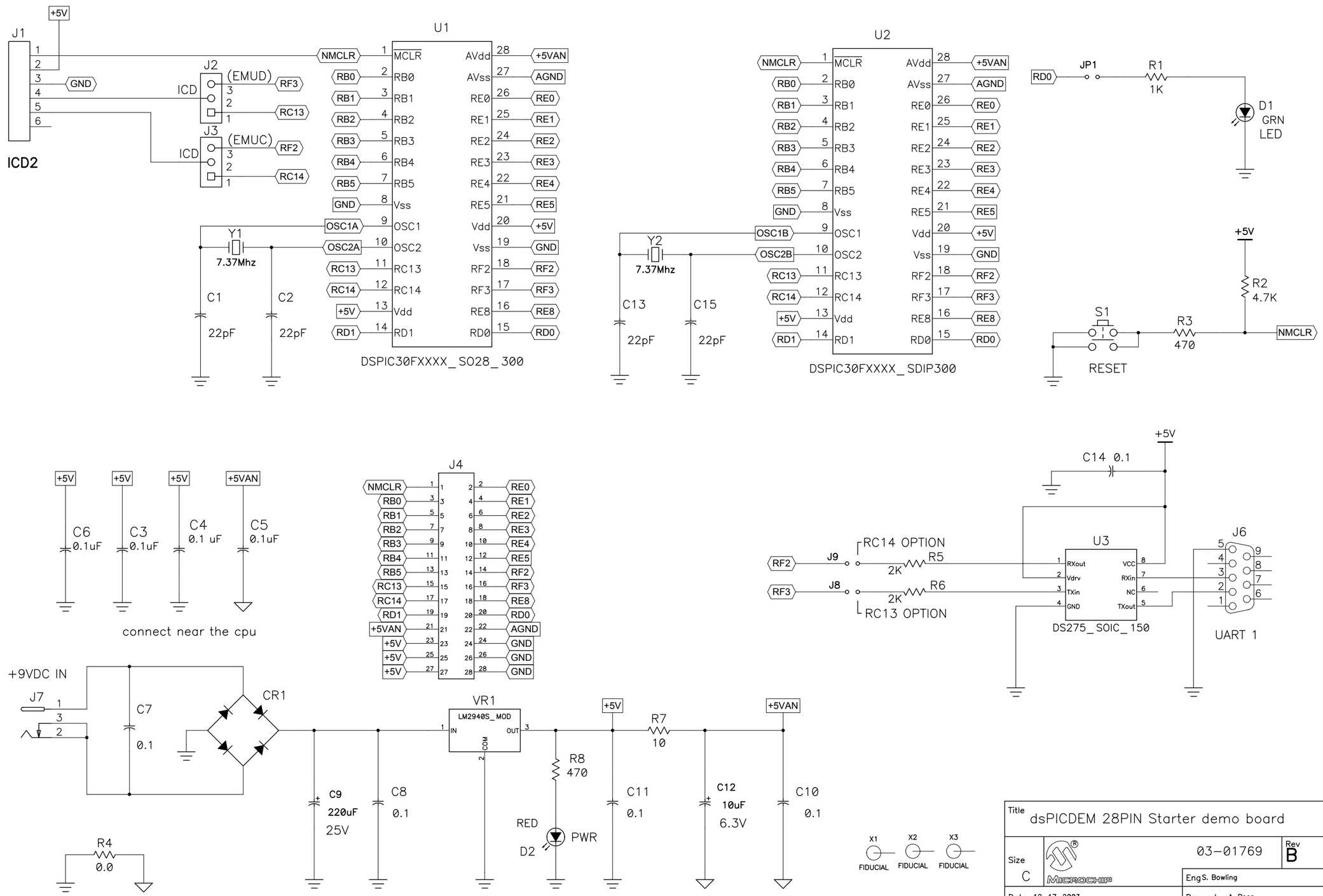

Title	dsPICDEM 28PIN Starter demo board
Size C	03-01769 Rev B
	Eng S. Bowling
Date 12-17-2003	Drawn by A. Rees
Filename 03-01769_RevB.sch	Sheet 1 of 1