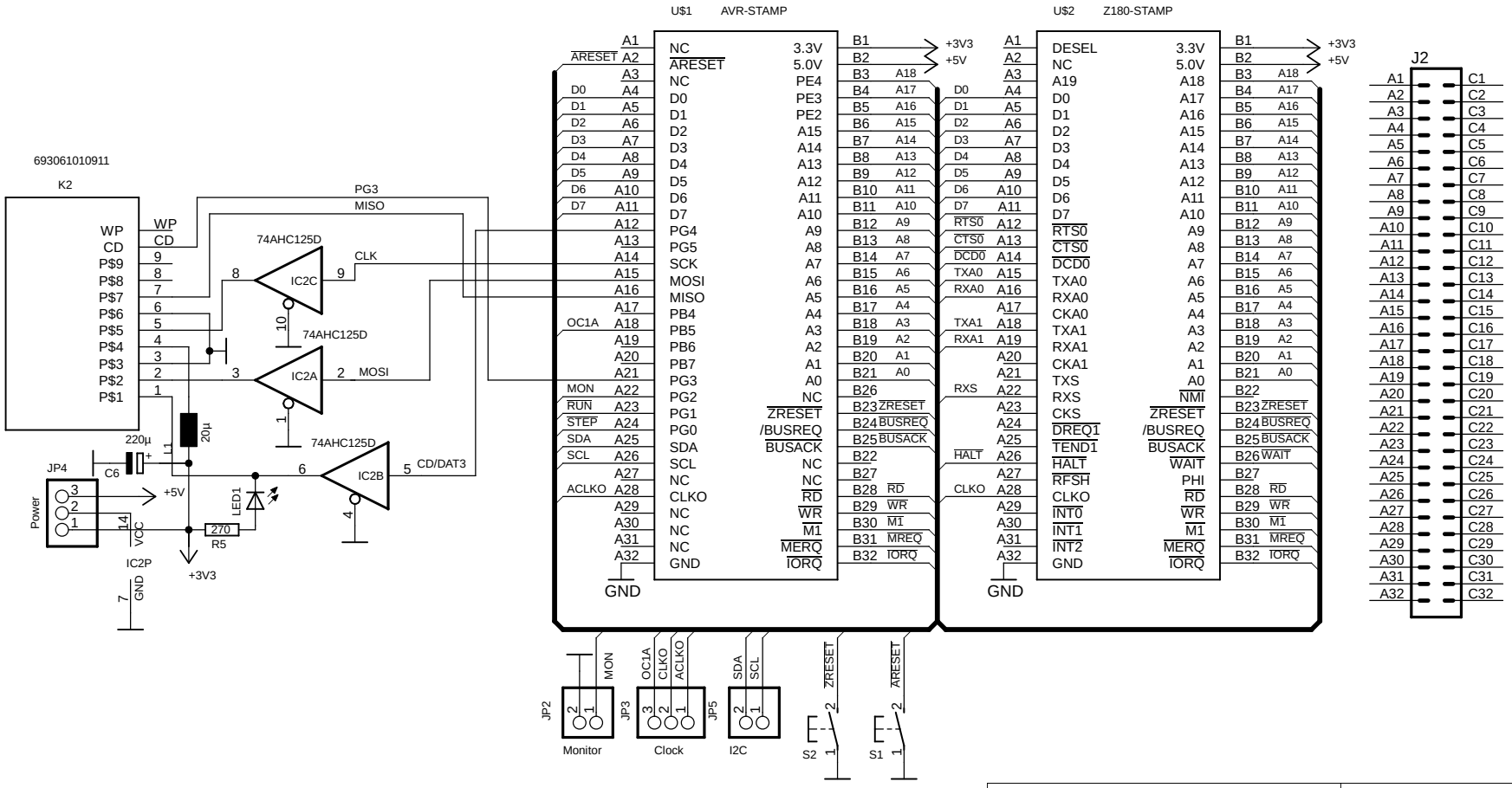
U$1 AVR-STAMP
U$2 Z180-STAMP
693061010911
K2
74AHC125D
IC2C
IC2A
IC2B
PG3
MISO
CLK
MOSI
CD/DAT3
220µ
C6
L1
20µ
JP4
Power
+5V
LED1
270
R5
IC2P
+3V3
GND
J2
JP2
Monitor
JP3
Clock
JP5
I2C
S2
S1
ZRESET
ARESET
CPU_ECB
21.05.2015 11:53:05
Sheet: 1/2

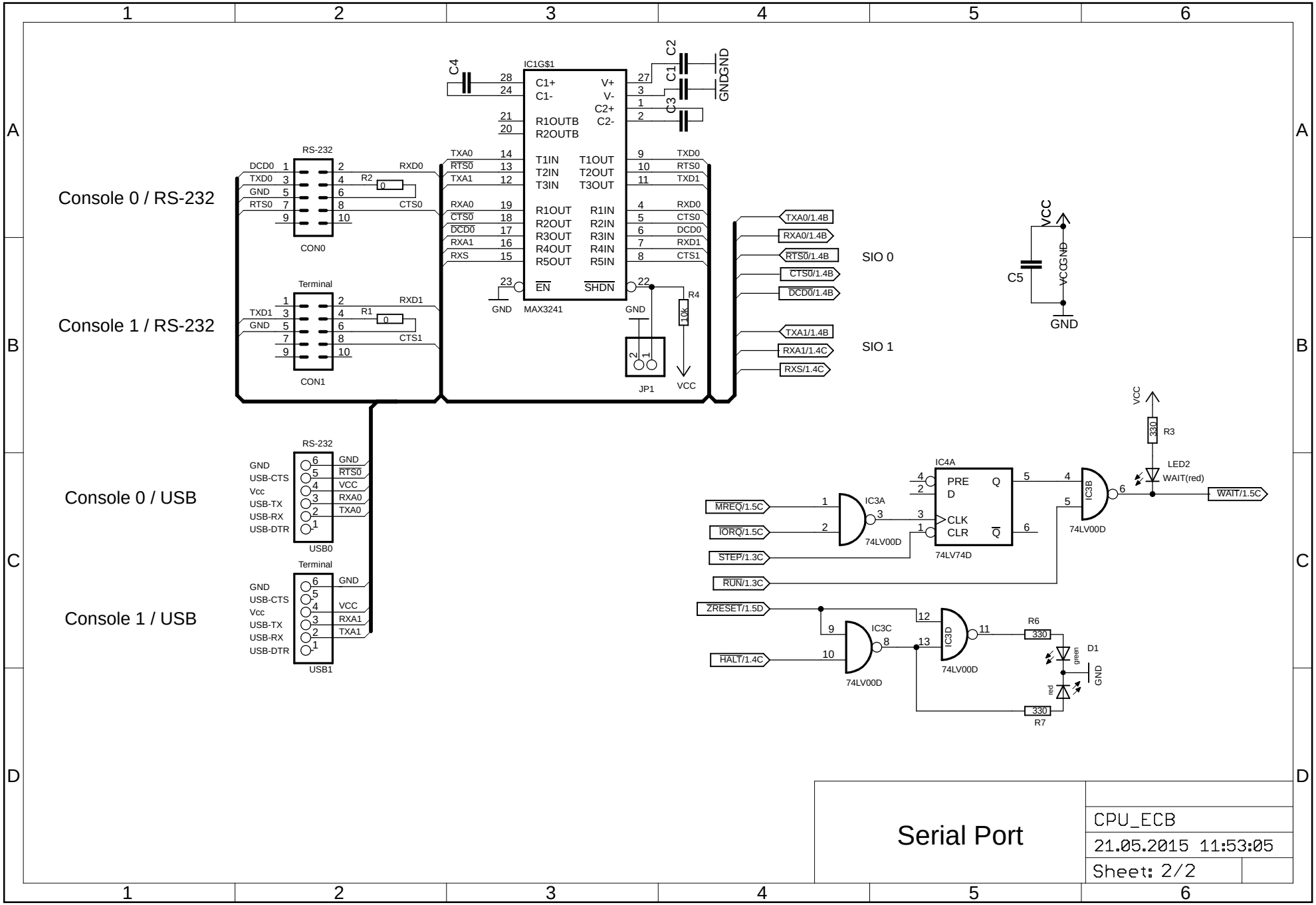

Serial Port

CPU_ECB

21.05.2015 11:53:05

Sheet: 2/2