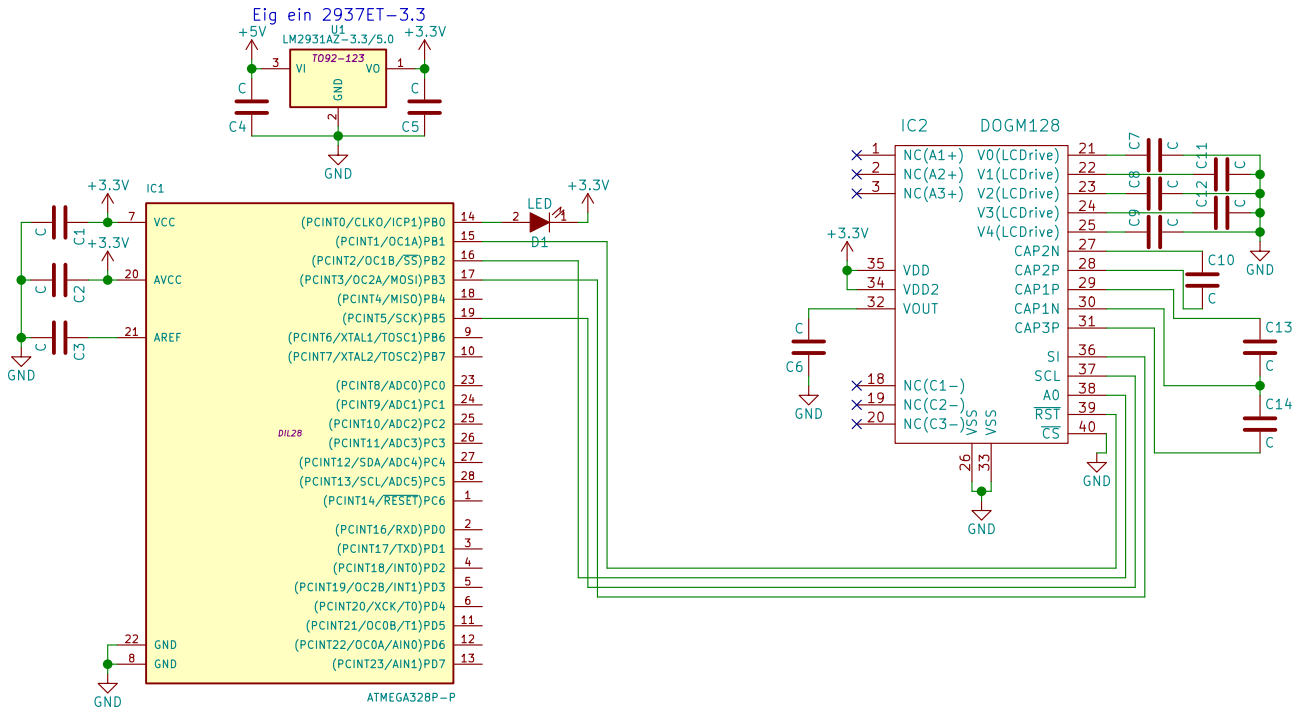

Sheet: /
File: noname.sch

Title:

Size: A4	Date:	Rev:
KiCad E.D.A. kicad (after 2015-may-25 BZR unknown)-product		Id: 1/1