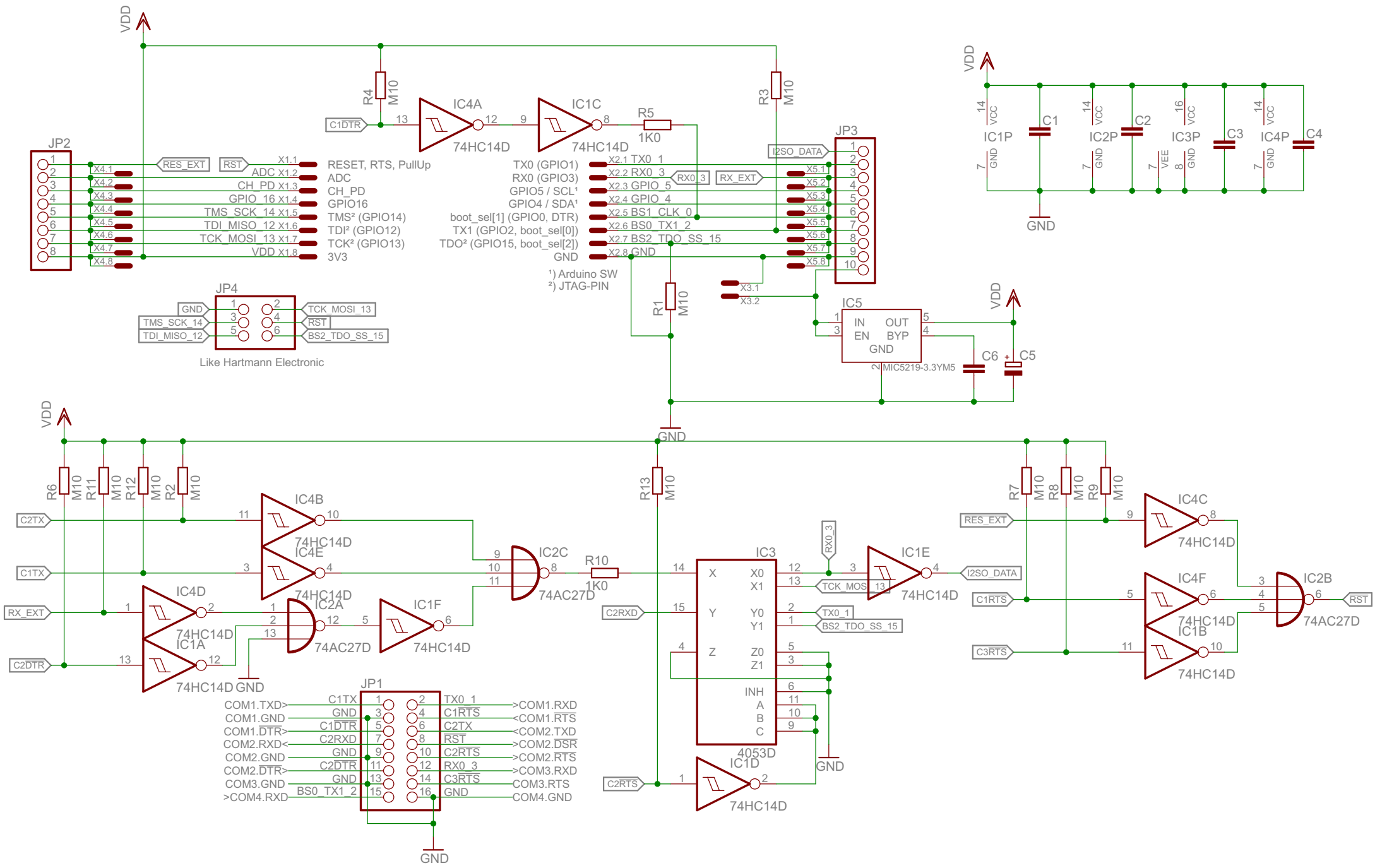
VDD
JP2
RES_EXT
RST
X1.1 RESET, RTS, PullUp
X1.2 ADC ADC
X1.3 CH_PD CH_PD
X1.4 GPIO_16 GPIO16
X1.5 TMS_SCK_14 TMS² (GPIO14)
X1.6 TDI_MISO_12 TDI² (GPIO12)
X1.7 TCK_MOSI_13 TCK² (GPIO13)
X1.8 VDD 3V3
R4 M10
C1DTR
IC4A
74HC14D
IC1C
74HC14D
R5
1K0
R3 M10
I2SO_DATA
JP3
X2.1 TX0_1 TX0 (GPIO1)
X2.2 RX0_3 RX0 (GPIO3)
X2.3 GPIO_5 GPIO5 / SCL¹
X2.4 GPIO_4 GPIO4 / SDA¹
X2.5 BS1_CLK_0 boot_sel[1] (GPIO0, DTR)
X2.6 BS0_TX1_2 TX1 (GPIO2, boot_sel[0])
X2.7 BS2_TDO_SS_15 TDO² (GPIO15, boot_sel[2])
X2.8 GND GND
RX0_3
RX_EXT
X5.1
X5.2
X5.3
X5.4
X5.5
X5.6
X5.7
X5.8
¹) Arduino SW
²) JTAG-PIN
R1 M10
X3.1
X3.2
IC5
IN OUT
EN BYP
GND
MIC5219-3.3YM5
C6
C5
JP4
GND
TMS_SCK_14
TDI_MISO_12
TCK_MOSI_13
RST
BS2_TDO_SS_15
Like Hartmann Electronic
IC1P
IC2P
IC3P
IC4P
C1
C2
C3
C4
VCC
GND
VEE
R6 M10
R11 M10
R12 M10
R2 M10
C2TX
C1TX
RX_EXT
C2DTR
IC4B
IC4E
74HC14D
IC4D
IC1A
IC2A
74AC27D
IC1F
IC2C
R10
1K0
R13 M10
IC3
4053D
X
Y
Z
INH
A
B
C
X0
X1
Y0
Y1
Z0
Z1
TCK_MOS_13
TX0_1
BS2_TDO_SS_15
IC1E
I2SO_DATA
C2RXD
C2RTS
IC1D
R7 M10
R8 M10
R9 M10
RES_EXT
C1RTS
C3RTS
IC4C
IC4F
IC1B
IC2B
RST
JP1
COM1.TXD>
COM1.GND
COM1.DTR>
COM2.RXD<
COM2.GND
COM2.DTR>
COM3.GND
>COM4.RXD
C1TX
GND
C1DTR
C2RXD
GND
C2DTR
GND
BS0_TX1_2
TX0_1
C1RTS
C2TX
RST
C2RTS
RX0_3
C3RTS
GND
>COM1.RXD
<COM1.RTS
<COM2.TXD
>COM2.DSR
>COM2.RTS
>COM3.RXD
COM3.RTS
COM4.GND