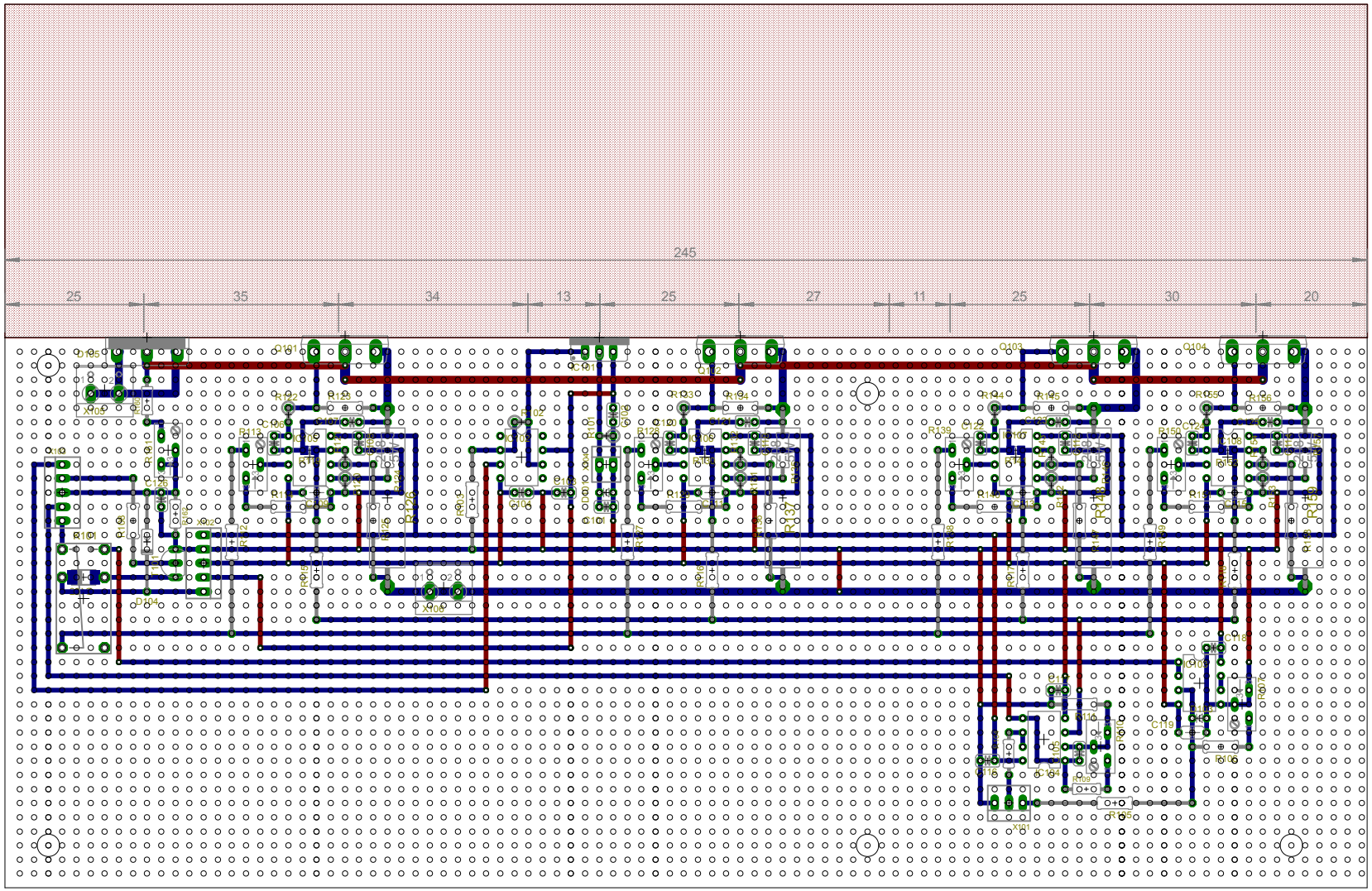
245
25
35
34
13
25
27
11
25
30
20

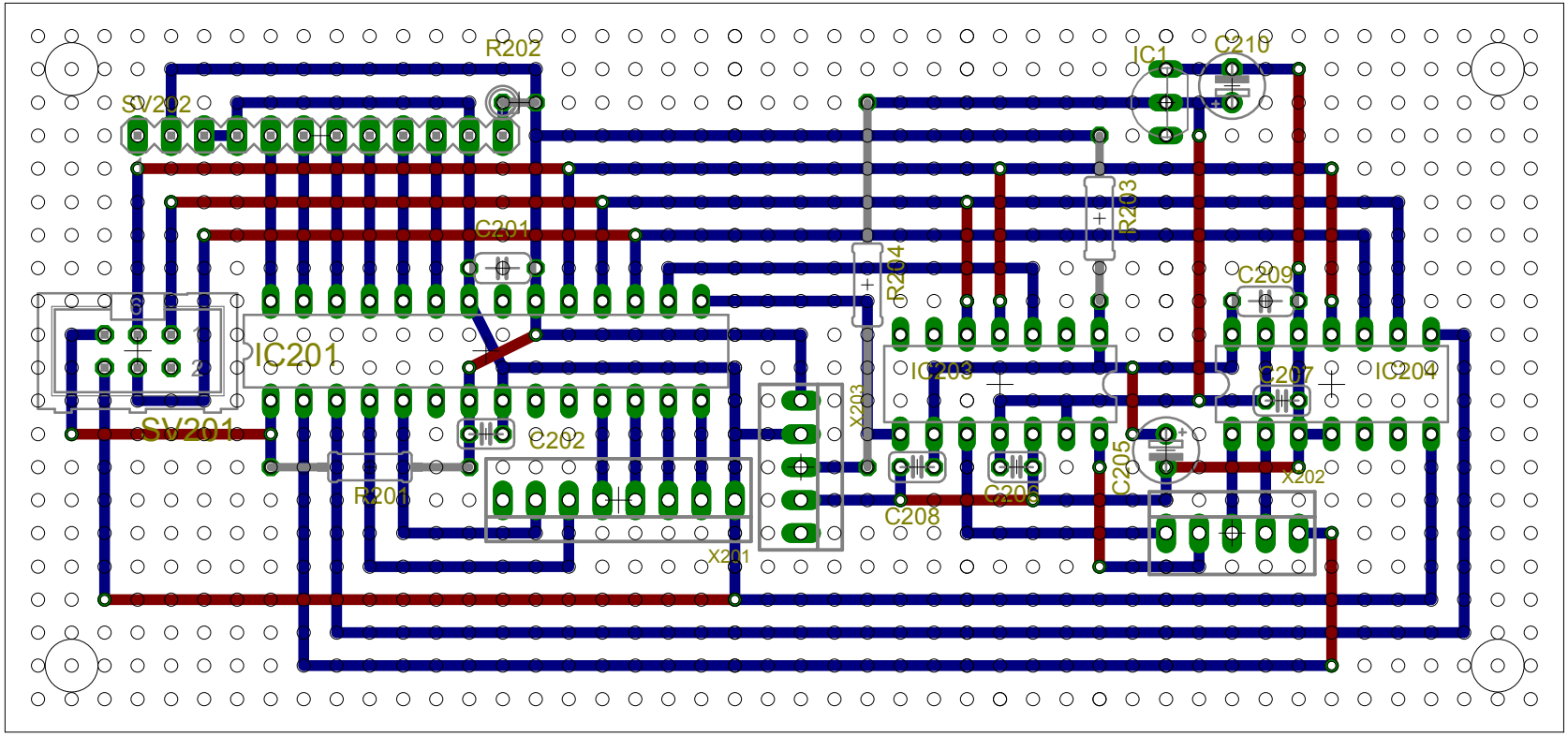
R202
IC1
C210
SV202
C201
R203
R204
C209
IC201
IC203
IC204
C207
X203
SV201
C202
C205
X202
R201
C208
C206
X201

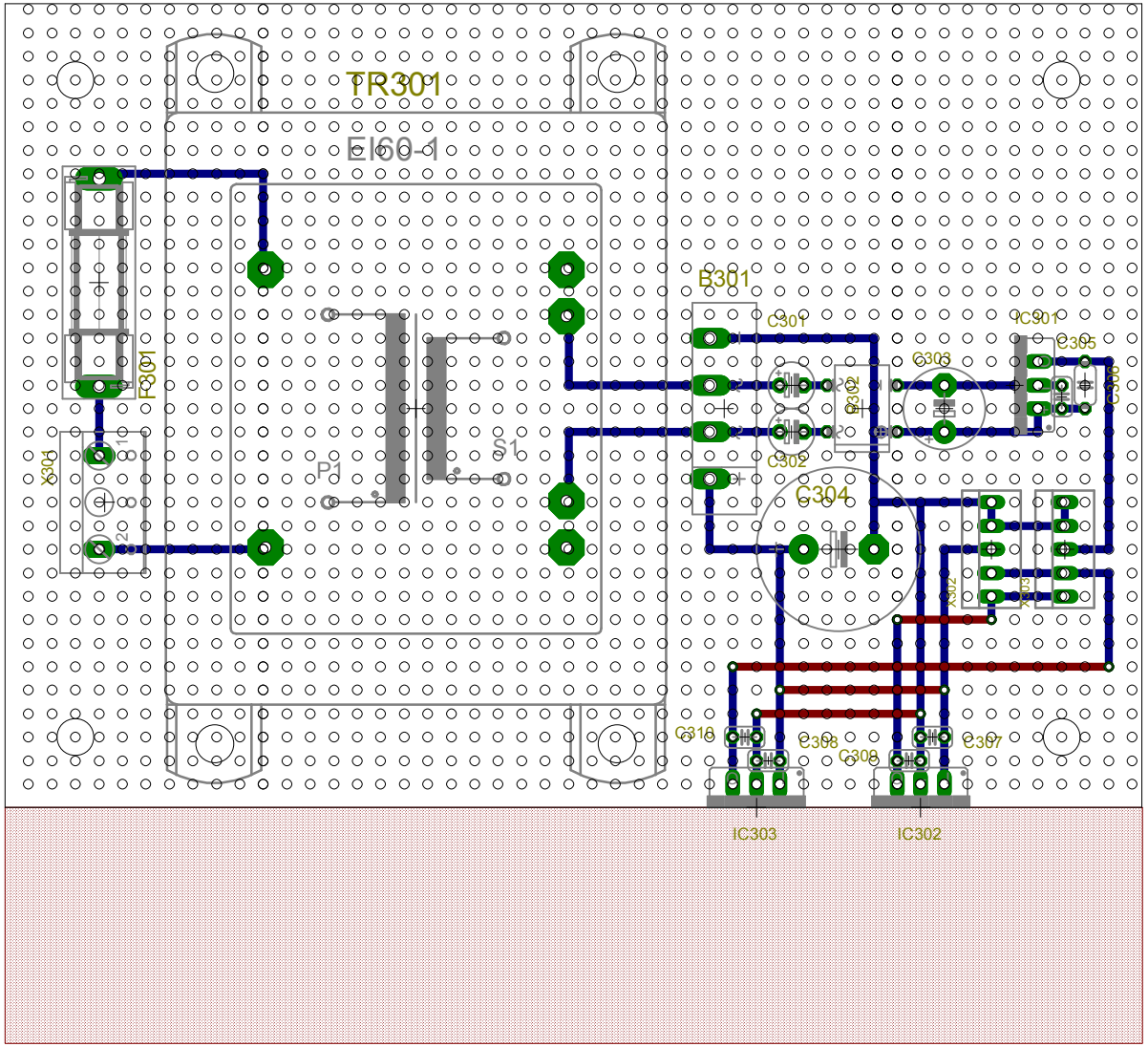
TR301
EI60-1
B301
C301
IC301
C305
C303
C306
C302
C304
X302
C310
C308
C309
C307
IC303
IC302
F301
X301
P1
S1