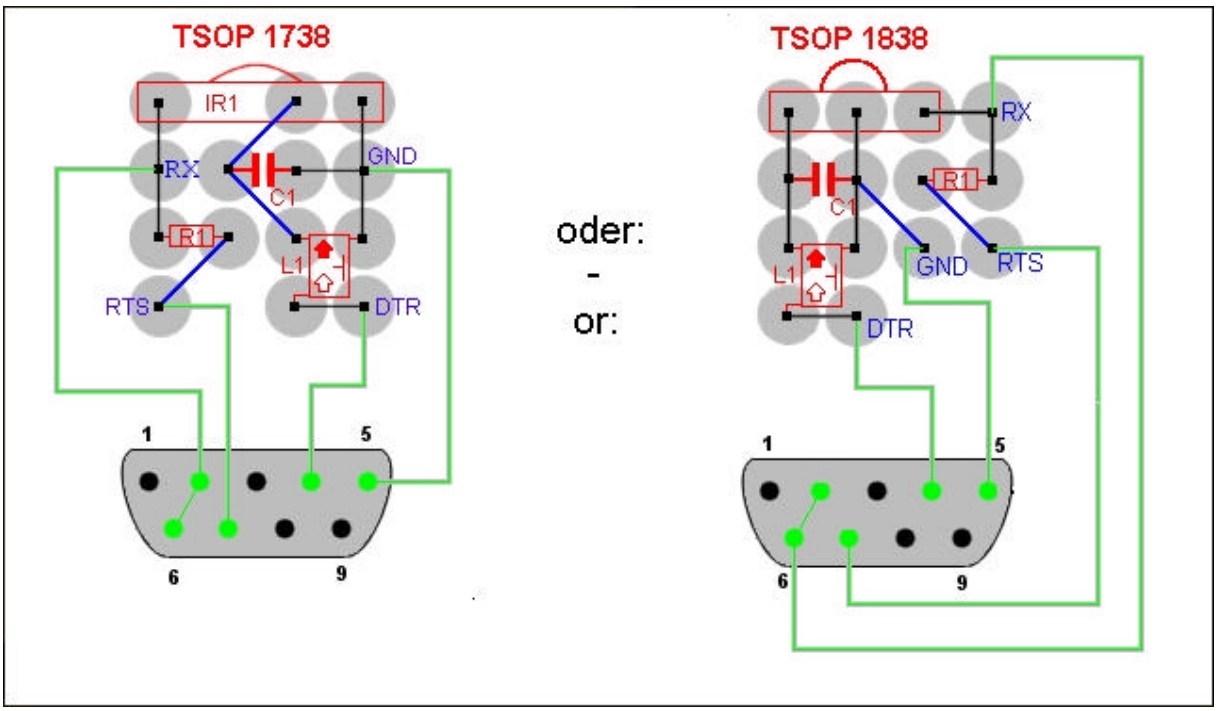
TSOP 1738
IR1
RX
GND
C1
R1
L1
RTS
DTR
1
5
6
9
oder:
-
or:
TSOP 1838
RX
R1
C1
L1
GND
RTS
DTR
1
5
6
9

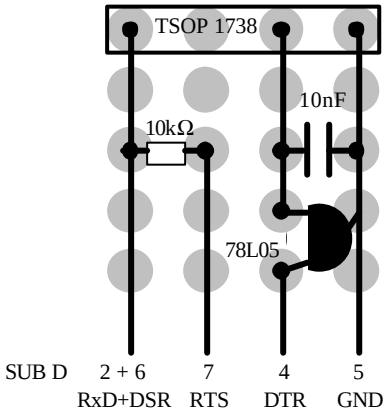
TSOP 1738
10kΩ
10nF
78L05
SUB D
2 + 6
RxD+DSR
7
RTS
4
DTR
5
GND

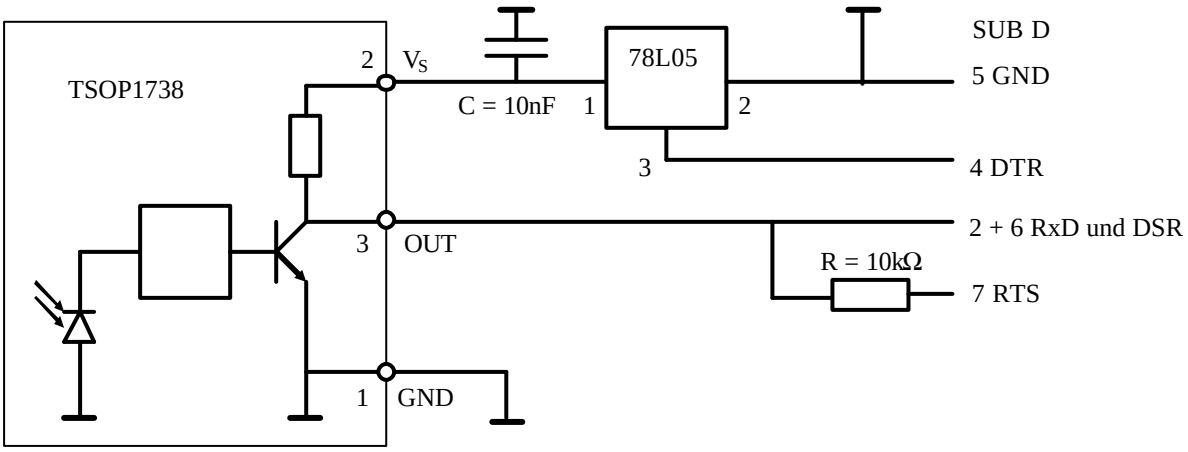
TSOP1738
2
V_S
C = 10nF
1
78L05
2
3
SUB D
5 GND
4 DTR
3
OUT
2 + 6 RxD und DSR
R = 10kΩ
7 RTS
1
GND