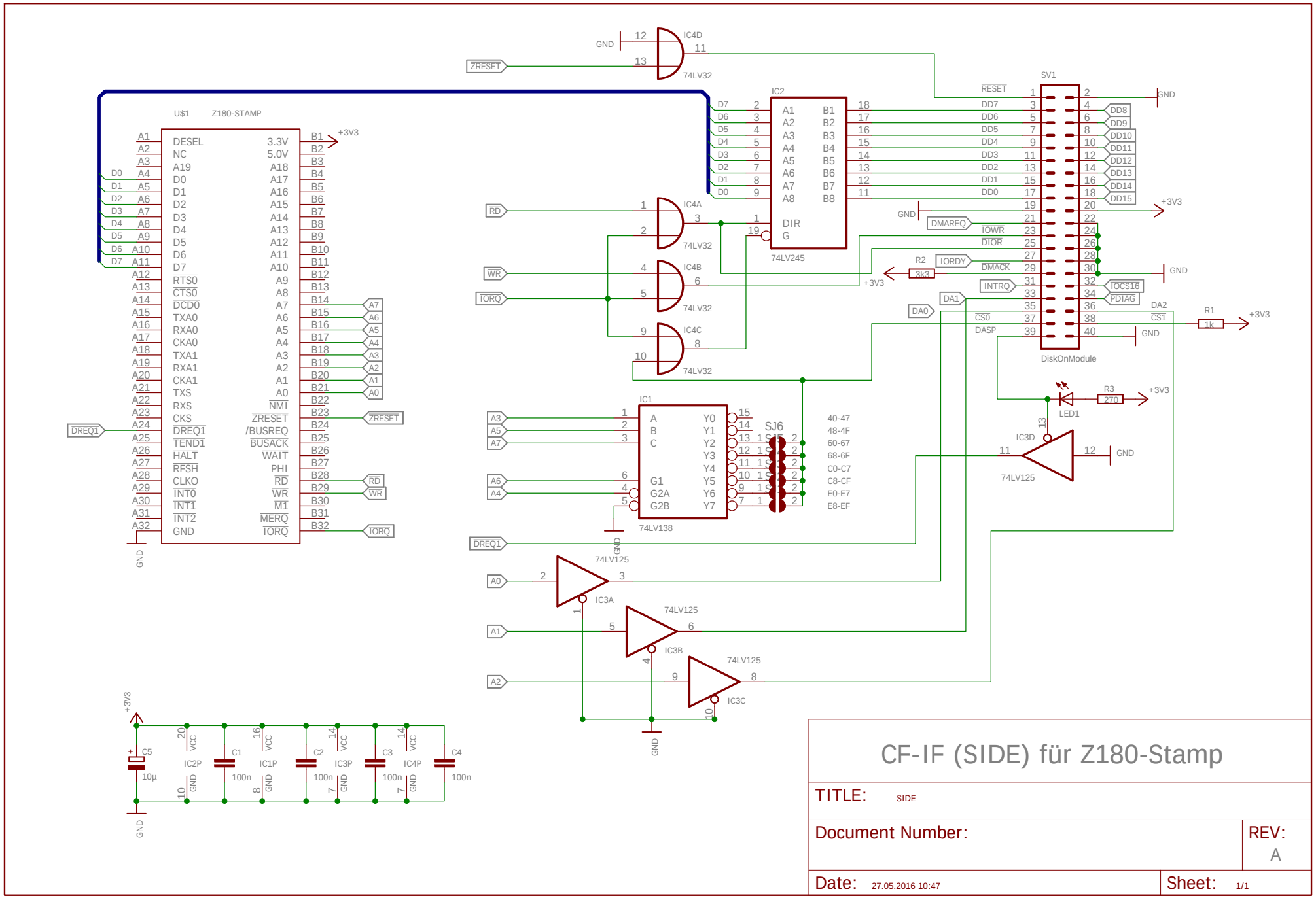

CF-IF (SIDE) für Z180-Stamp

TITLE: SIDE

Document Number:

REV: A

Date: 27.05.2016 10:47

Sheet: 1/1