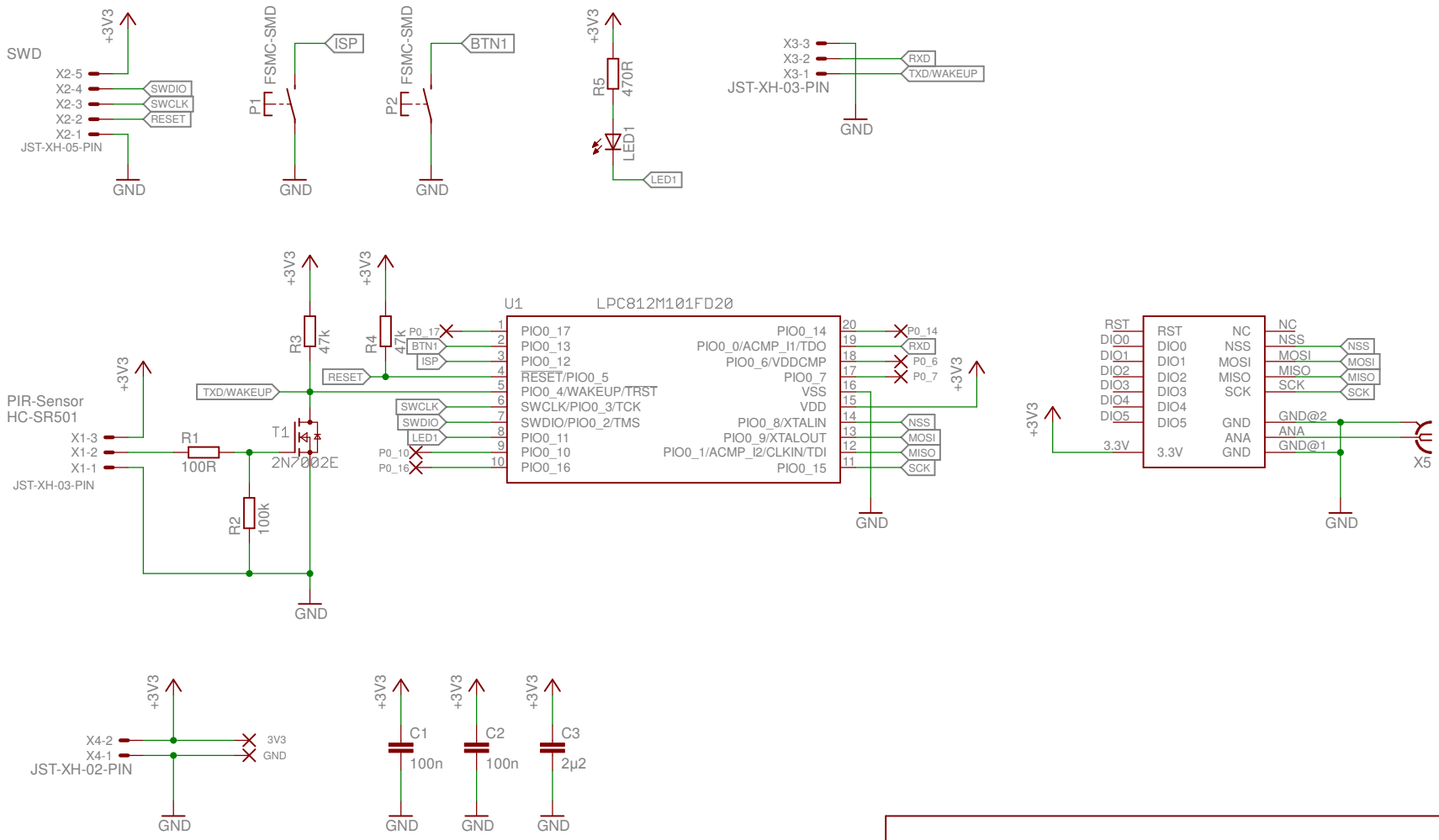

TITLE: FS20-PIR-V10

Document Number:

REV:

Date: 18.04.2016 15:59:54

Sheet: 1/1