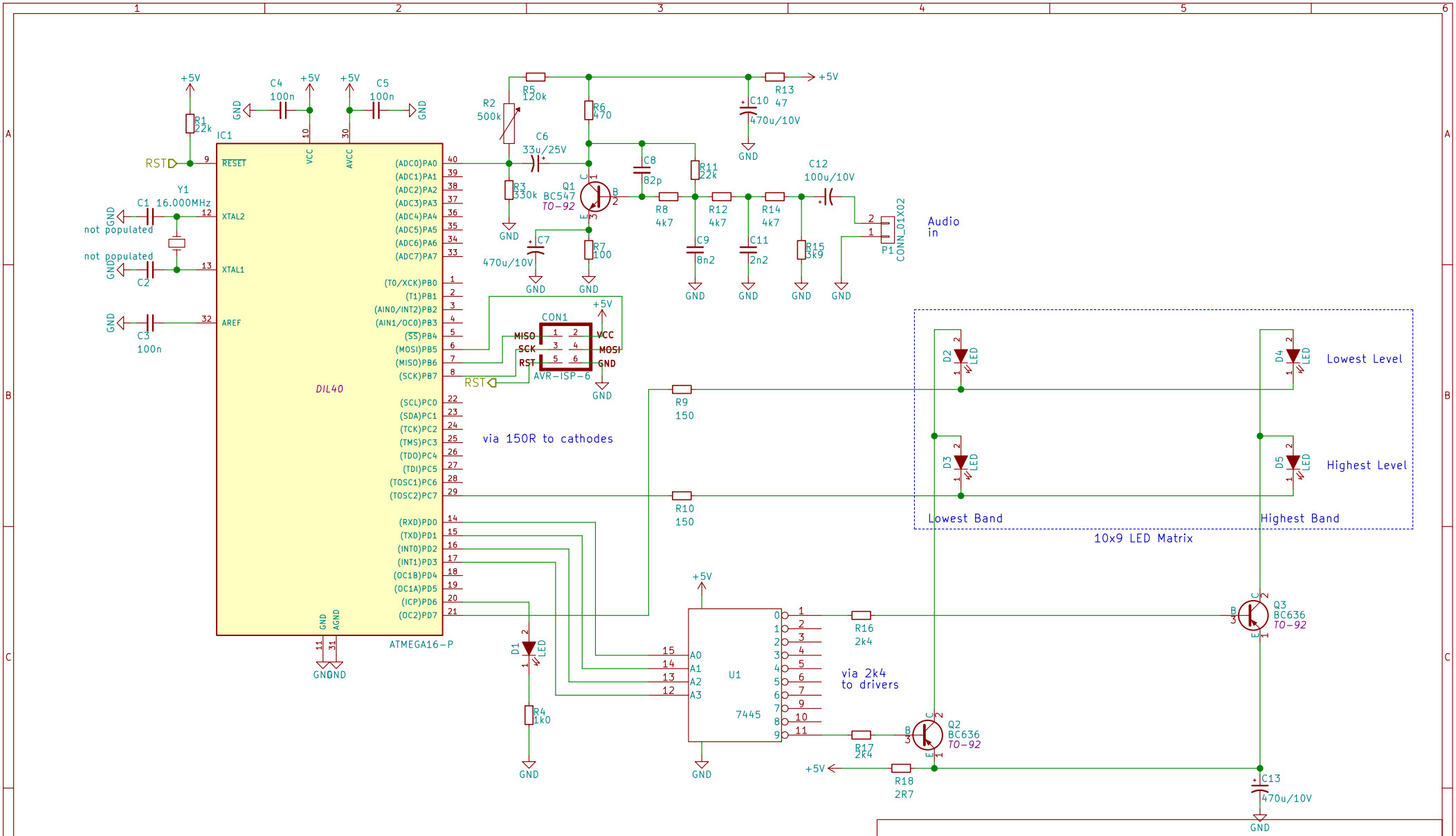

free use granted for non-commercial purposes

derguteweka

Sheet: /

File: ledmatrix.sch

Title: hb

Size: A4	Date: 2016-07-17	**Rev: 1.0**
KiCad E.D.A. kicad (2015-12-12 BZR 6370)-product		Id: 1/1