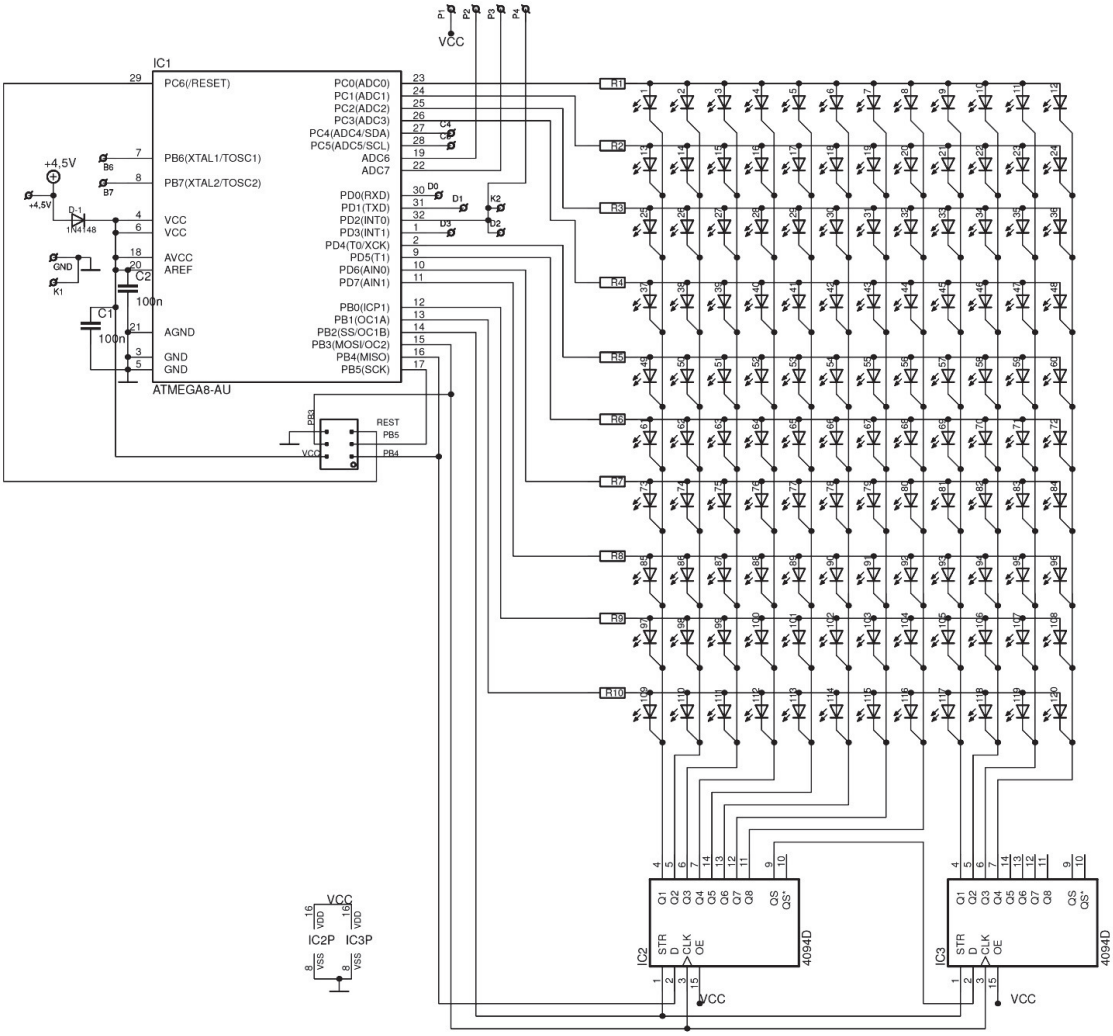
IC1
PC6(/RESET)
PB6(XTAL1/TOSC1)
PB7(XTAL2/TOSC2)
VCC
VCC
AVCC
AREF
AGND
GND
GND
PC0(ADC0)
PC1(ADC1)
PC2(ADC2)
PC3(ADC3)
PC4(ADC4/SDA)
PC5(ADC5/SCL)
ADC6
ADC7
PD0(RXD)
PD1(TXD)
PD2(INT0)
PD3(INT1)
PD4(T0/XCK)
PD5(T1)
PD6(AIN0)
PD7(AIN1)
PB0(ICP1)
PB1(OC1A)
PB2(SS/OC1B)
PB3(MOSI/OC2)
PB4(MISO)
PB5(SCK)
ATMEGA8-AU
+4,5V
GND
K1
C1
C2
100n
100n
D-1
1N4148
VCC
REST
PB5
PB4
PB3
IC2
IC3
4094D
STR
D
CLK
OE
Q1
Q2
Q3
Q4
Q5
Q6
Q7
Q8
QS
QS'
VDD
VSS
IC2P
IC3P
R1
R2
R3
R4
R5
R6
R7
R8
R9
R10
D0
D1
D2
D3
K2
C4
C5

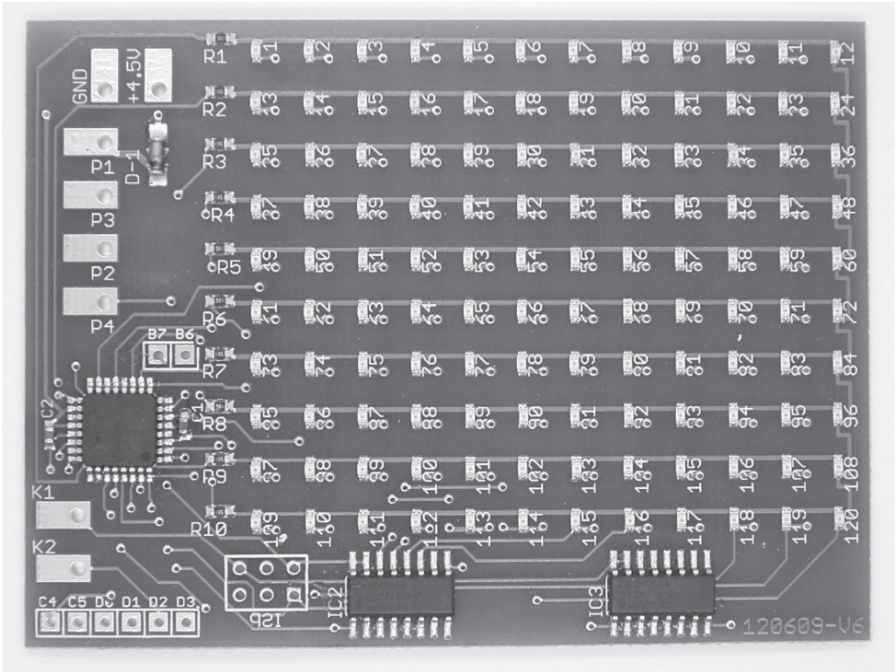
GND
+4.5U
P1
P3
P2
P4
D-1
B7 B6
C2
C1
K1
K2
C4 C5 D0 D1 D2 D3
IC2
IC3
120609-V6