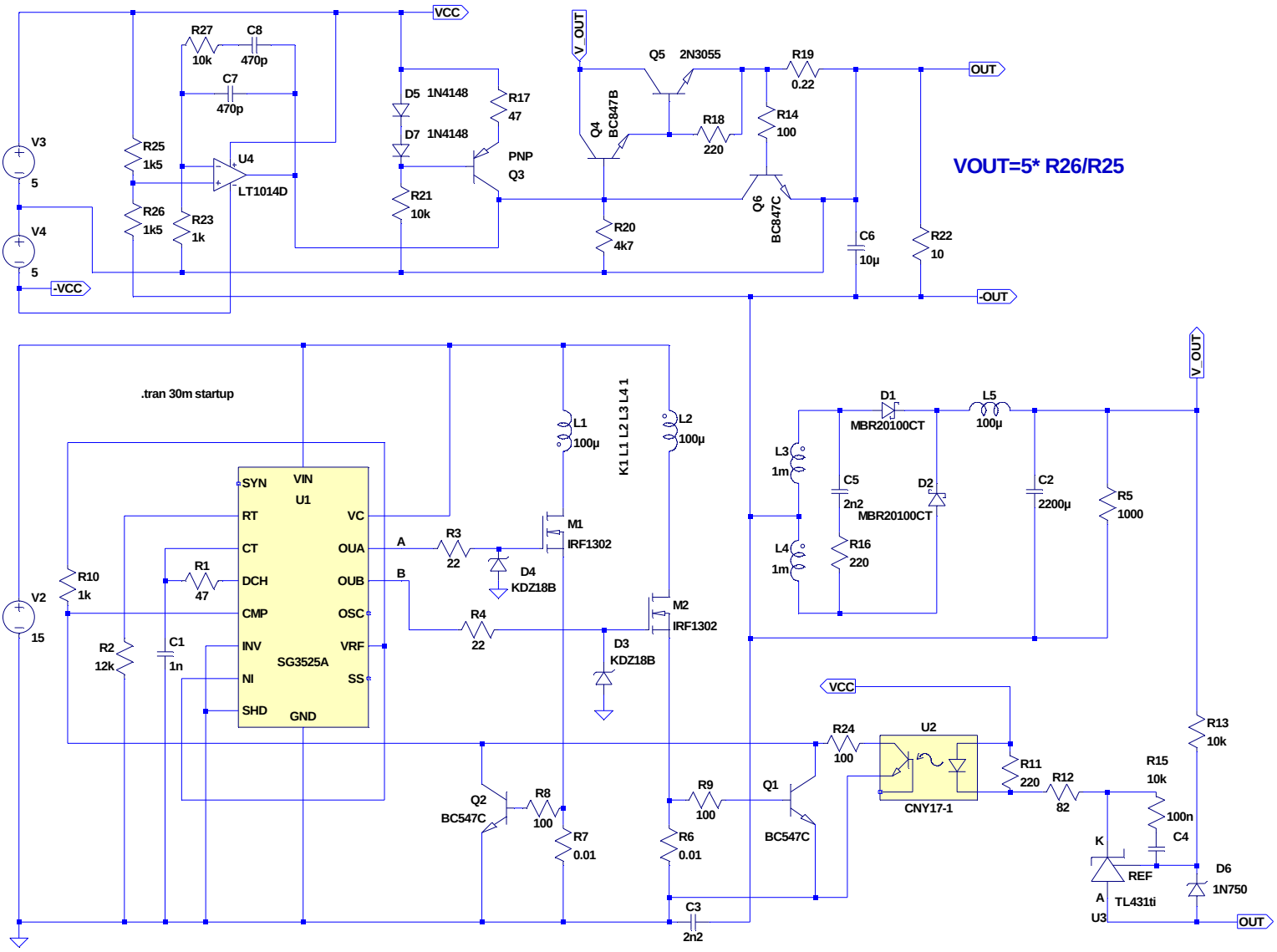

--- C:\Data\Thanh\sg3525_15_to_32.asc ---