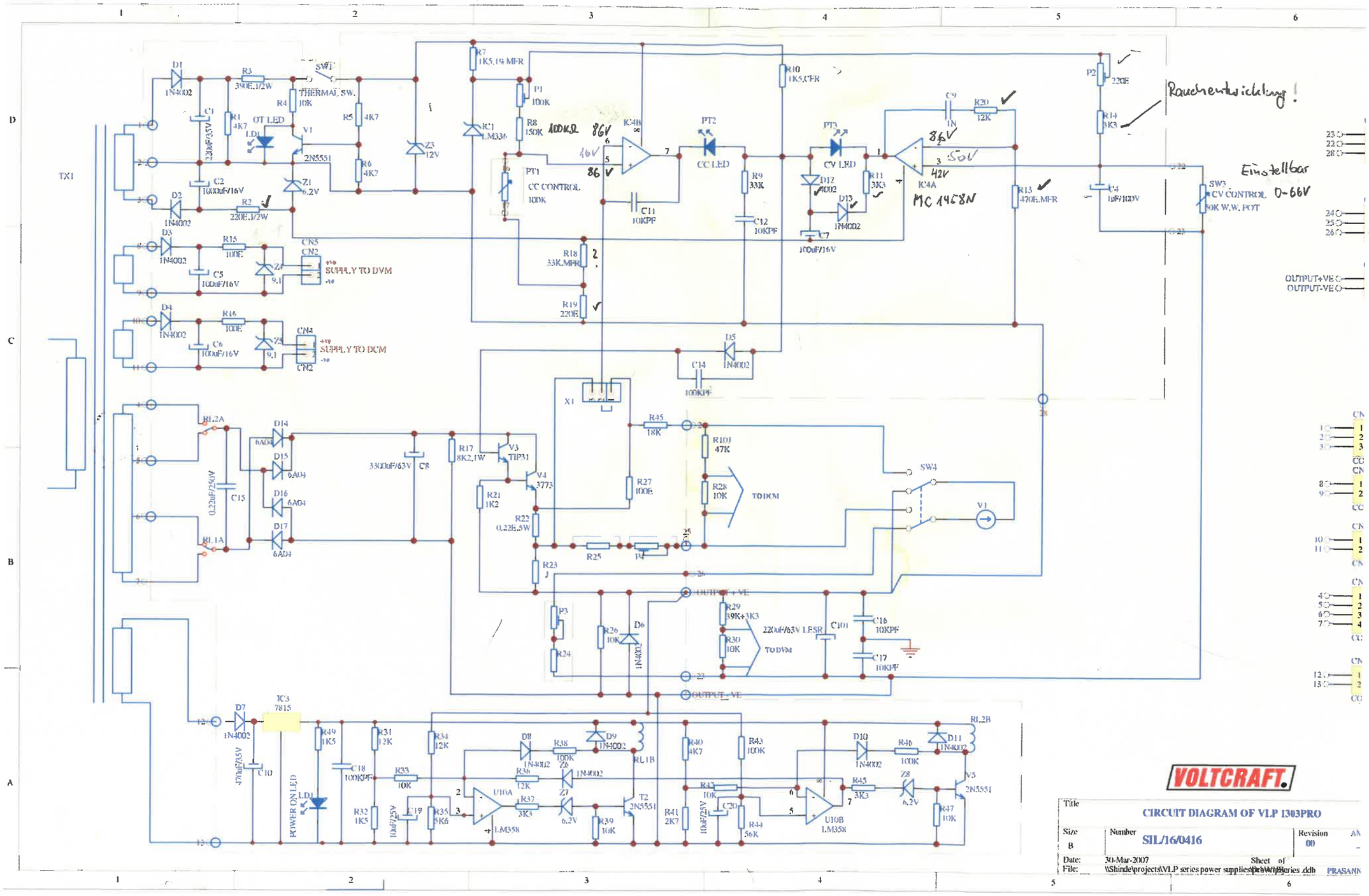
Rauchentwicklung !
Einstellbar 0-66V
MC 1458N
CC CONTROL 100K
CV CONTROL 50K W.W. POT
SUPPLY TO DVM
SUPPLY TO DCM
TO DCM
TO DVM
OUTPUT+VE
OUTPUT-VE
POWER ON LED
VOLTCRAFT
CIRCUIT DIAGRAM OF VLP 1303PRO
SIL/16/0416
30-Mar-2007