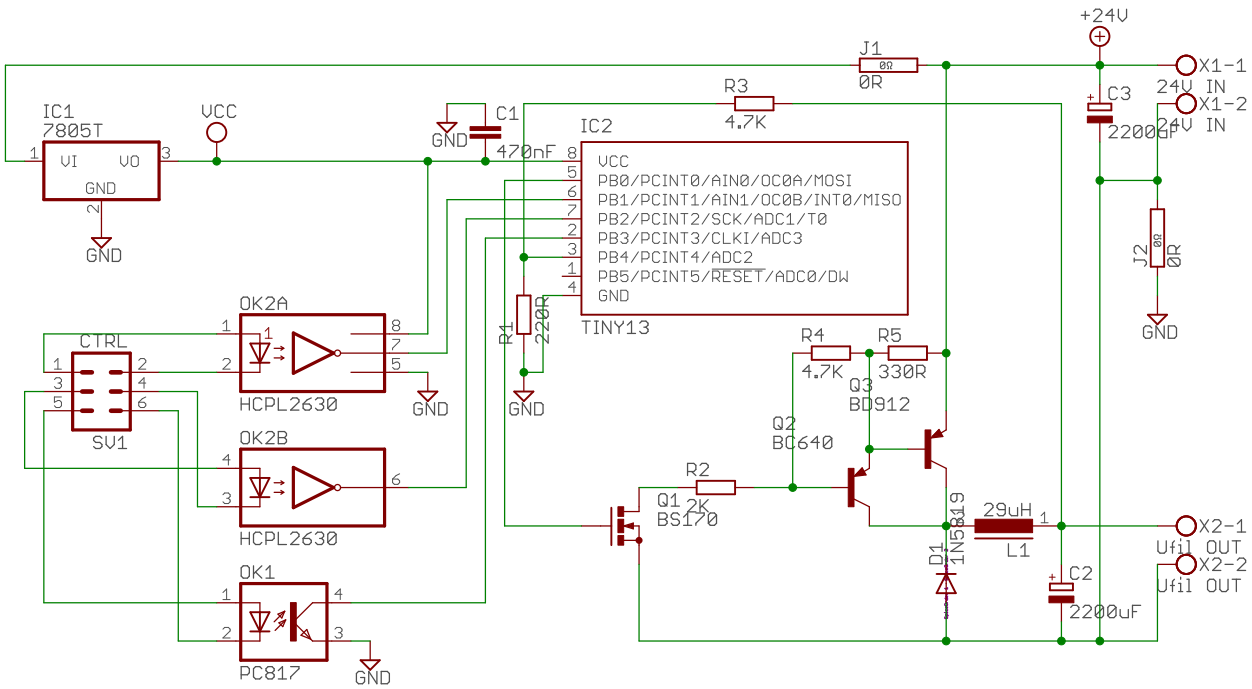
+24V
J1
0Ω
0R
X1-1
24V IN
X1-2
24V IN
C3
2200uF
R3
4.7K
IC1
7805T
VI
VO
GND
VCC
C1
470nF
IC2
VCC
PB0/PCINT0/AIN0/OC0A/MOSI
PB1/PCINT1/AIN1/OC0B/INT0/MISO
PB2/PCINT2/SCK/ADC1/T0
PB3/PCINT3/CLKI/ADC3
PB4/PCINT4/ADC2
PB5/PCINT5/RESET/ADC0/DW
GND
TINY13
J2
0Ω
0R
OK2A
HCPL2630
CTRL
SV1
OK2B
HCPL2630
OK1
PC817
R1
220R
R4
4.7K
R5
330R
Q3
BD912
Q2
BC640
R2
2K
Q1
BS170
D1
1N5819
29uH
L1
C2
2200uF
X2-1
Ufil OUT
X2-2
Ufil OUT