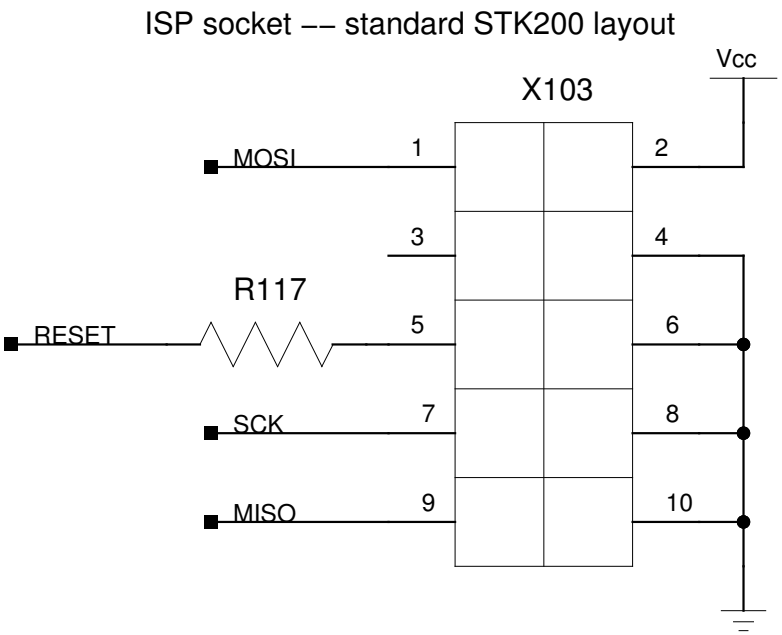
ISP socket –– standard STK200 layout
X103
Vcc
MOSI
1
2
3
4
R117
RESET
5
6
SCK
7
8
MISO
9
10

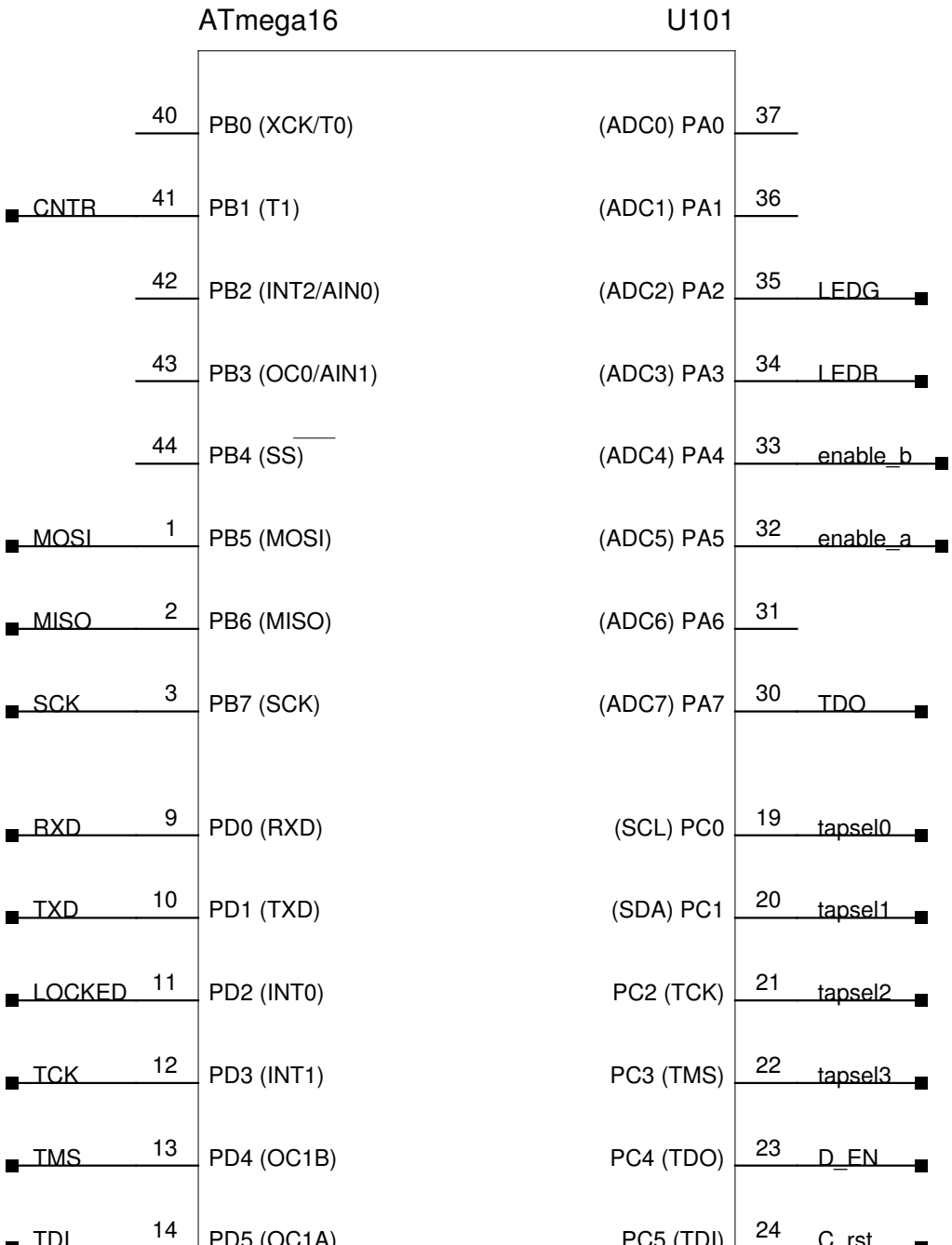
ATmega16
U101
40 PB0 (XCK/T0)
CNTR 41 PB1 (T1)
42 PB2 (INT2/AIN0)
43 PB3 (OC0/AIN1)
44 PB4 (SS)
MOSI 1 PB5 (MOSI)
MISO 2 PB6 (MISO)
SCK 3 PB7 (SCK)
RXD 9 PD0 (RXD)
TXD 10 PD1 (TXD)
LOCKED 11 PD2 (INT0)
TCK 12 PD3 (INT1)
TMS 13 PD4 (OC1B)
TDI 14 PD5 (OC1A)
(ADC0) PA0 37
(ADC1) PA1 36
(ADC2) PA2 35 LEDG
(ADC3) PA3 34 LEDR
(ADC4) PA4 33 enable_b
(ADC5) PA5 32 enable_a
(ADC6) PA6 31
(ADC7) PA7 30 TDO
(SCL) PC0 19 tapsel0
(SDA) PC1 20 tapsel1
PC2 (TCK) 21 tapsel2
PC3 (TMS) 22 tapsel3
PC4 (TDO) 23 D_EN
PC5 (TDI) 24 C_rst