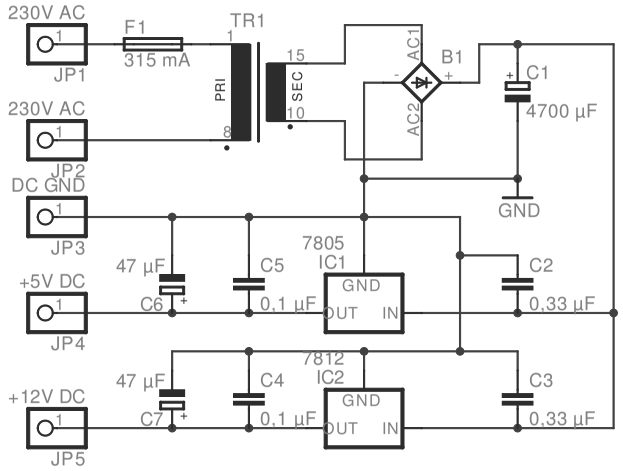

(c) 2003 by
Kai Uwe Schmidt

netzgeraet

14.03.2003 18:10:28

Sheet: 1/1