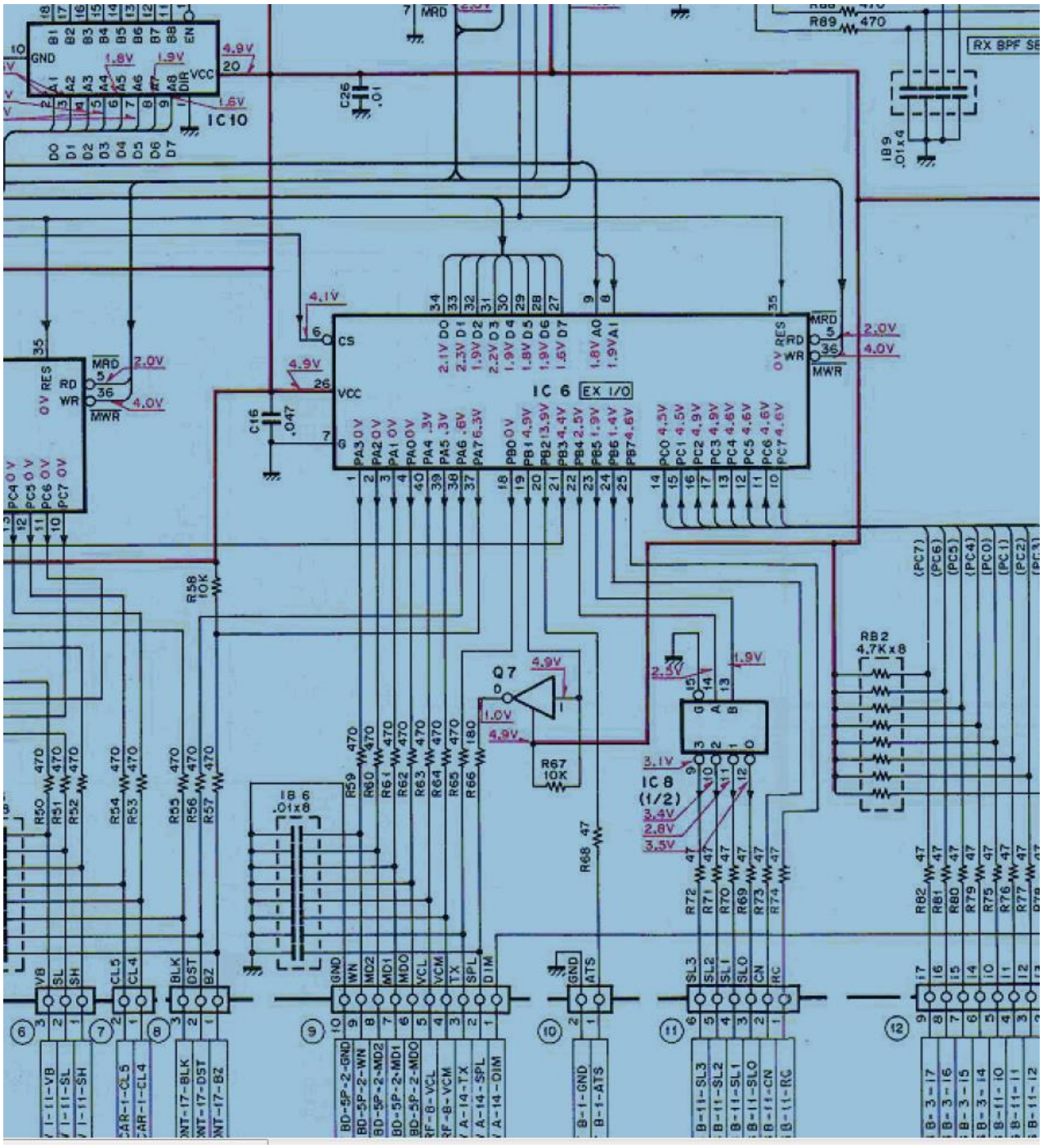
IC 10
IC 6 EX I/O
IC 8 (1/2)
Q7
RX BPF SE
IB 6 .01x8
IB 9 .01x4
RB2 4.7Kx8
R58 10K
R67 10K
R68 47
C16 .047
C26 .01
R89 470
MRD
MWR
CS
VCC
GND
RD
WR
BD-5P-2-GND
BD-5P-2-WN
BD-5P-2-MD2
BD-5P-2-MD1
BD-5P-2-MD0
RF-8-VCL
RF-8-VCM
A-14-TX
A-14-SPL
A-14-DIM
B-1-GND
B-1-ATS
B-11-SL3
B-11-SL2
B-11-SL1
B-11-SL0
B-11-CN
B-11-RC
B-3-17
B-3-16
B-3-15
B-3-14
B-11-10
B-11-11
B-11-12