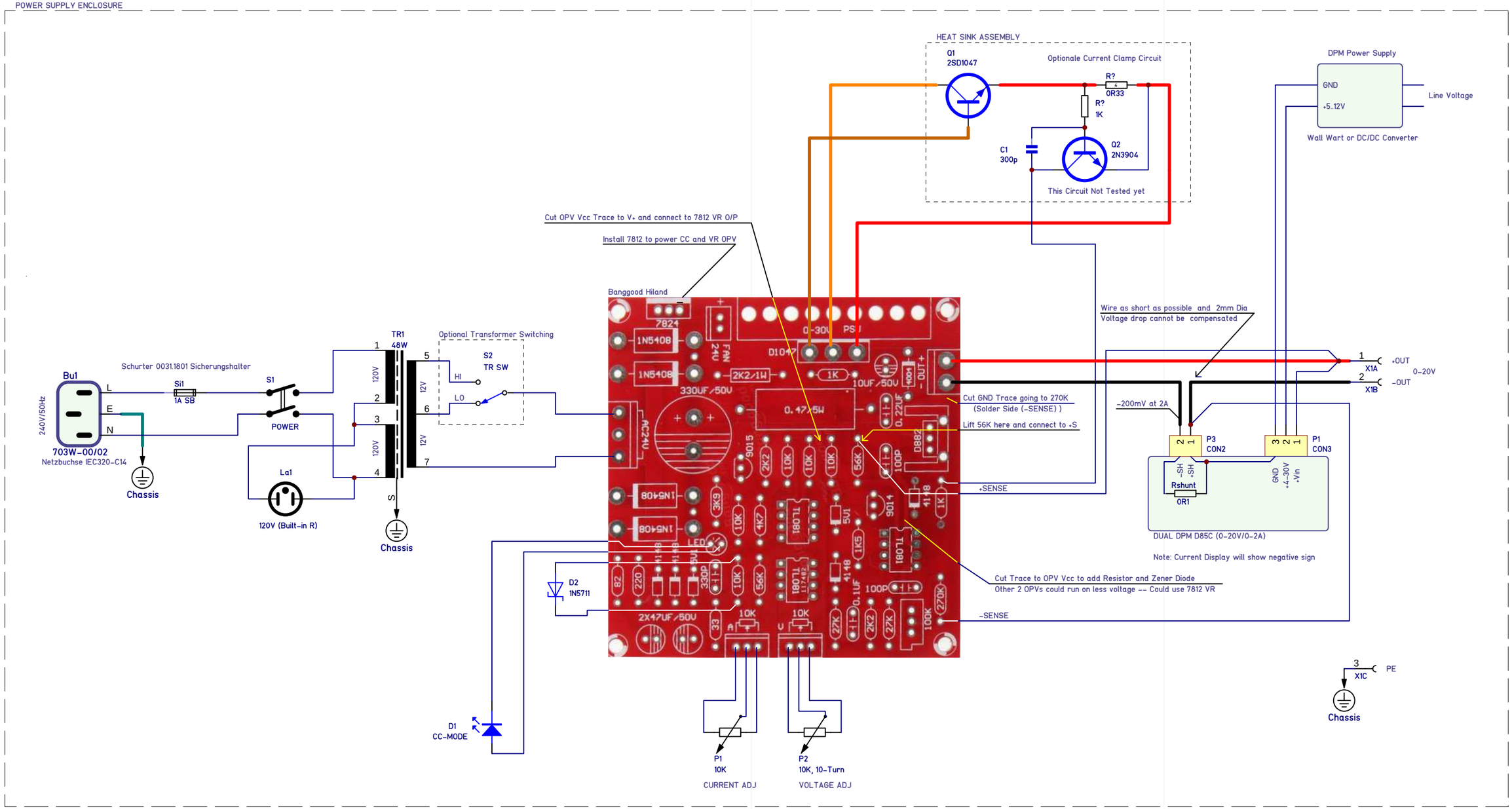

Purchase:
https://www.banggood.com/0-30V-2mA-3A-Adjustable-DC-Regulated-Power-Supply-DIY-Kit-p-958308.html?cur_warehouse=CN

Schematic:
http://www.electro-tech-online.com/attachments/0-30v-power-supply-pdf.90950/

Unless otherwise specified, all values are as follows: resistor values are in Ohms, i.e. 0R47, 5R6, 220, 5K6, 22K capacitor values are in Microfarads, i.e. 220p, 0u1, 2u2, 33 inductor values are in Microhenries, i.e. 0u22, 5u6, 68, 2m2

This drawing is our property. Duplication, unauthorized use of any kind is prohibited.

Without Approval use only for inquiry.

Approval:

	Date	Name
Drawn	24-Nov-2017	GJO
Modified		
Checked		

☐ Prototype ☐ Production ☐ BOM Done?

PCB Name:	Banggood LNG Board
PCB Nr.	TB-578127
PCB Type:	
Scale:	

Change Index	Change Notification Nr.	Date	Name

Title: Lab Power Supply 0-20V, 0-2A

Used in | Repl.for | Build No.

Drw. Type:

Prj. Nr: 17014

Size: A3 | Rev: 1.1 | Drw. Nr: 4415-0000

File: Wiring.sch | Sheet 1 of 1

Requires TGL-017 Font