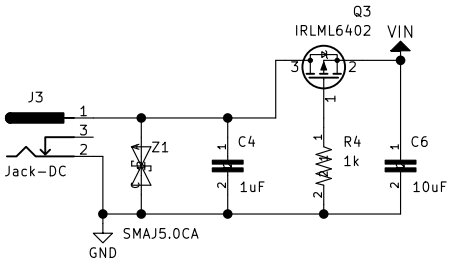

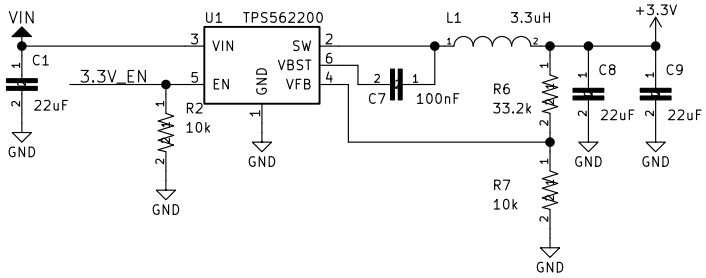

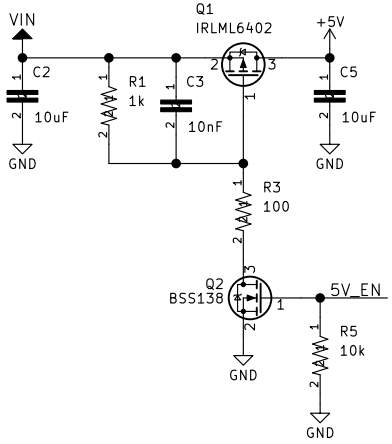

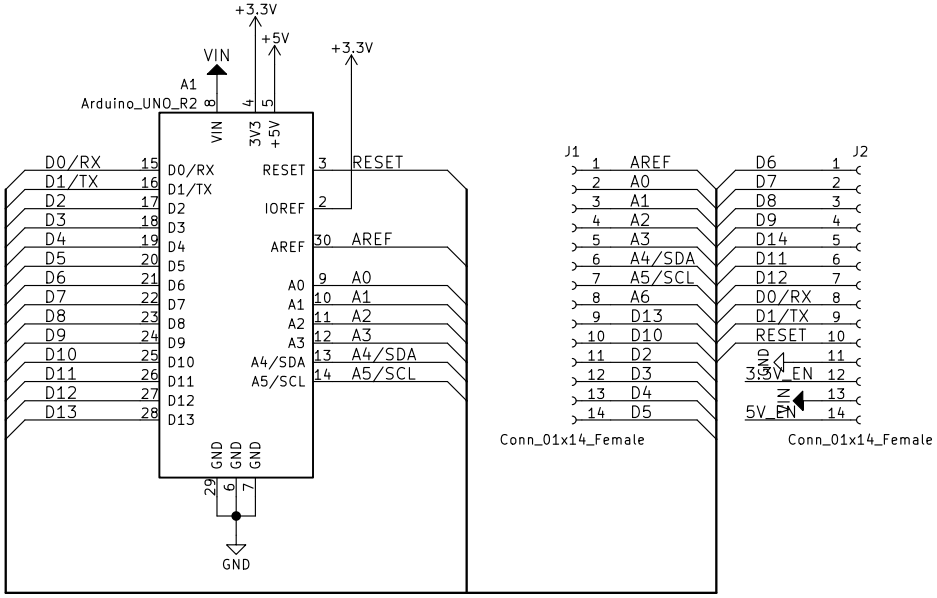

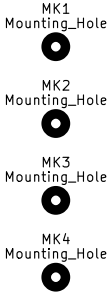

F. Siebel

Sheet: /

File: MAX1K2UNO.sch

Title: MAX1K2UNO

Size: A4	Date: 2017-12-01	**Rev: 001**
KiCad E.D.A. kicad 4.0.7		Id: 1/1