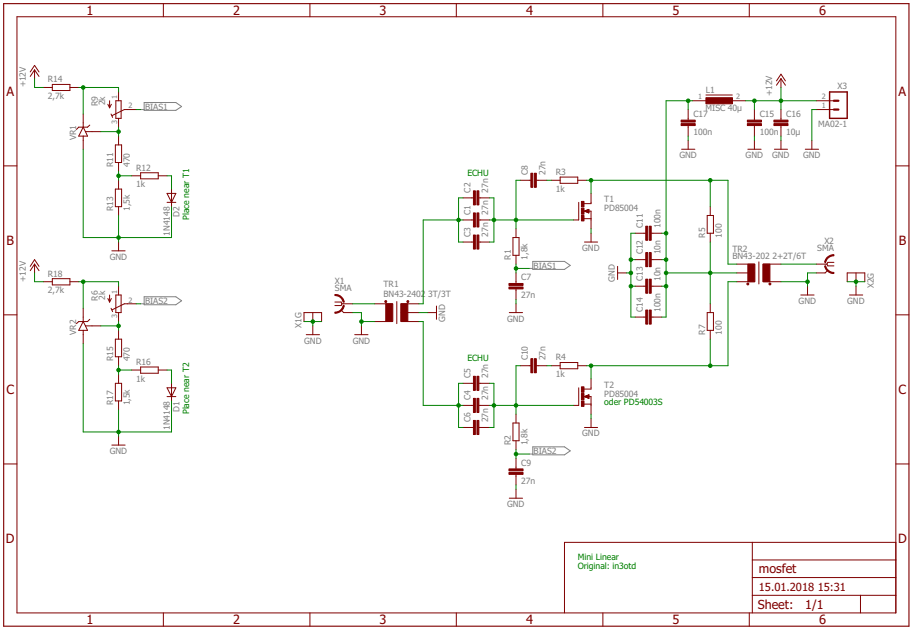

+12V
R14
2,7k
R9
2k
BIAS1
VR1
R11
470
R12
1k
R13
1,5k
D2
1N4148
Place near T1
GND
R18
2,7k
R6
2k
BIAS2
VR2
R15
470
R16
1k
R17
1,5k
D1
1N4148
Place near T2
ECHU
C2
27n
C1
27n
C3
27n
C8
27n
R3
1k
T1
PD85004
R1
1,8k
C7
27n
C11
100n
C12
10n
C13
10n
C14
100n
R5
100
R7
100
TR2
BN43-202 2+2T/6T
X2
SMA
X2G
X1
SMA
X1G
TR1
BN43-2402 3T/3T
C5
27n
C4
27n
C6
27n
C10
27n
R4
1k
T2
PD85004
oder PD54003S
R2
1,8k
C9
27n
L1
MISC 40µ
C17
100n
C15
100n
C16
10µ
X3
MA02-1
Mini Linear
Original: in3otd
mosfet
15.01.2018 15:31
Sheet: 1/1