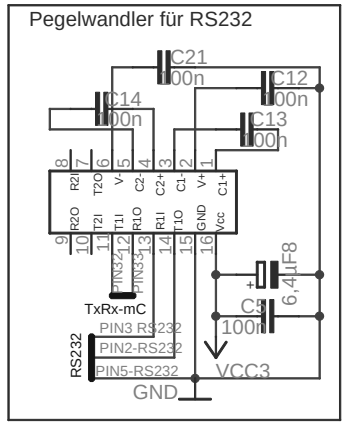

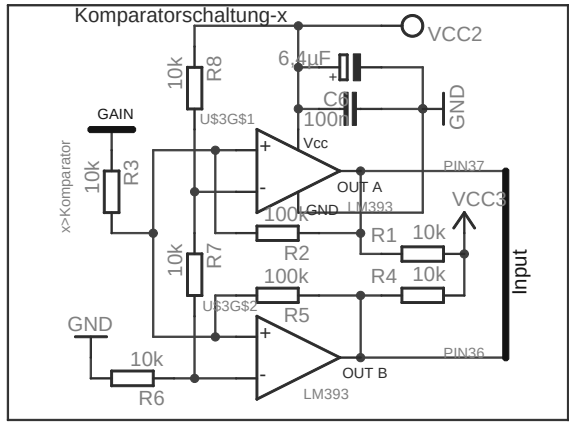

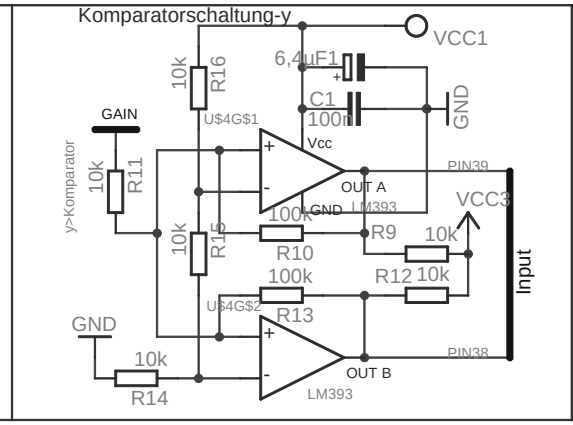

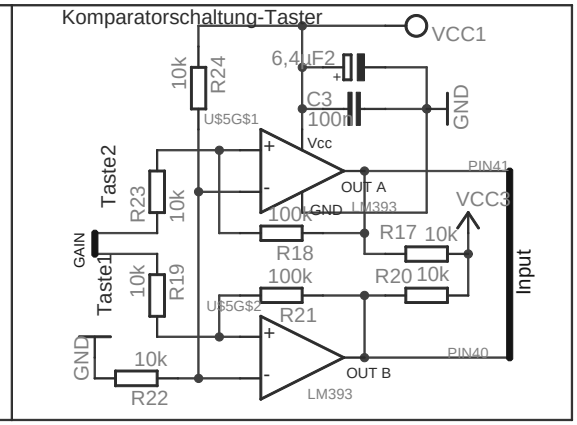

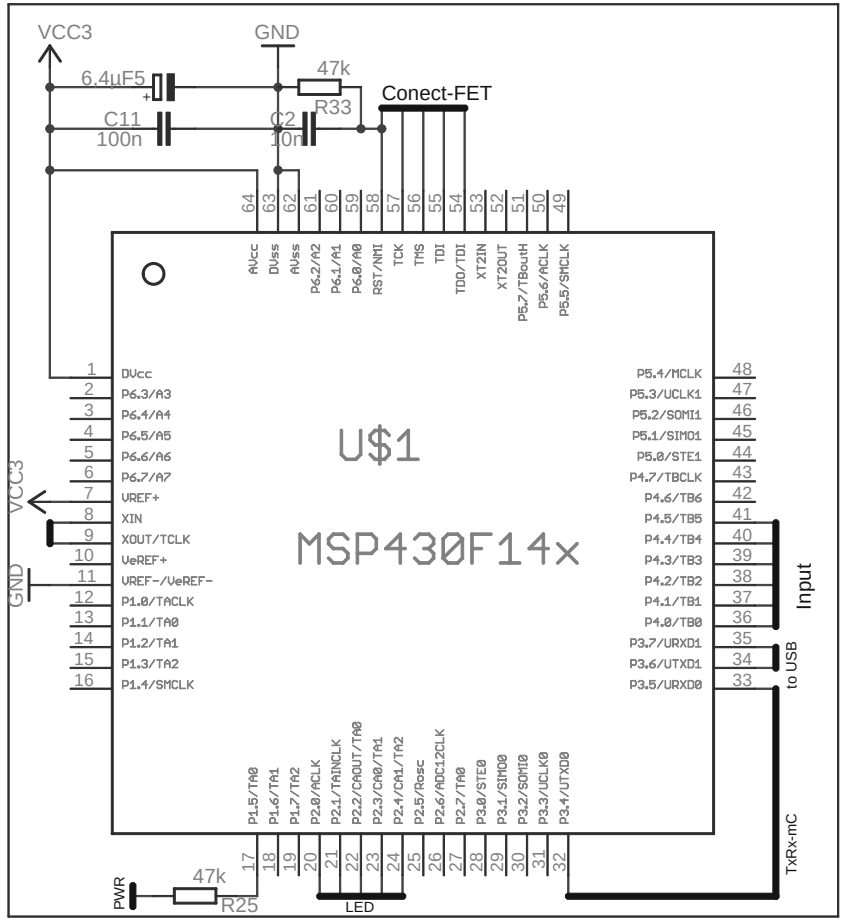

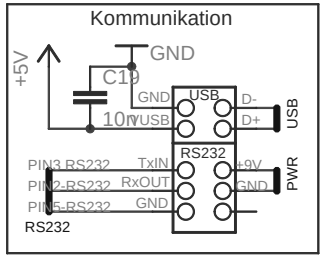

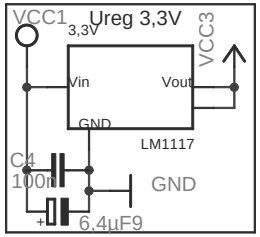

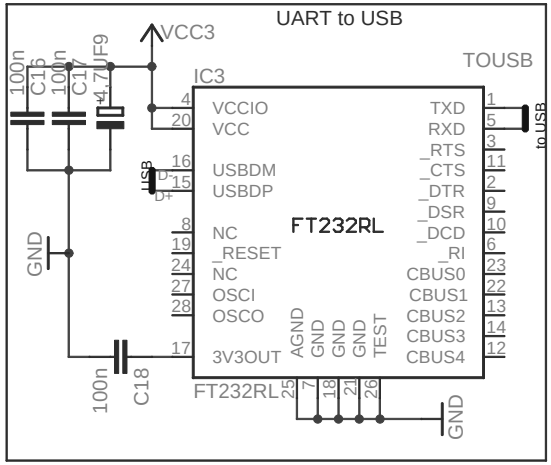

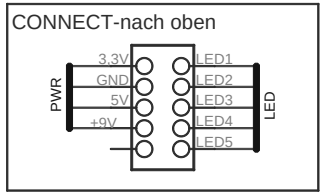

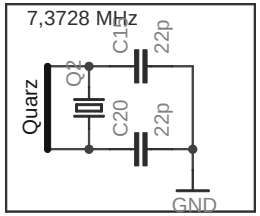

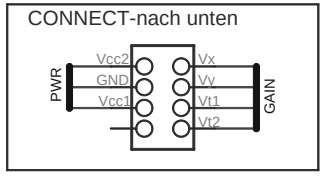

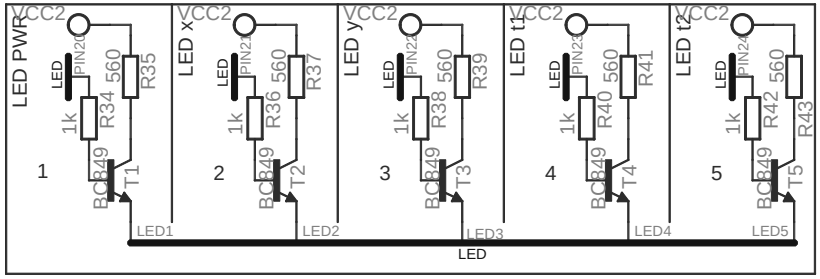

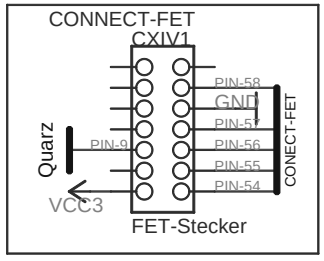

MSP430-Board	
28.04.2008 11:22:53	
Sheet: 1/1	