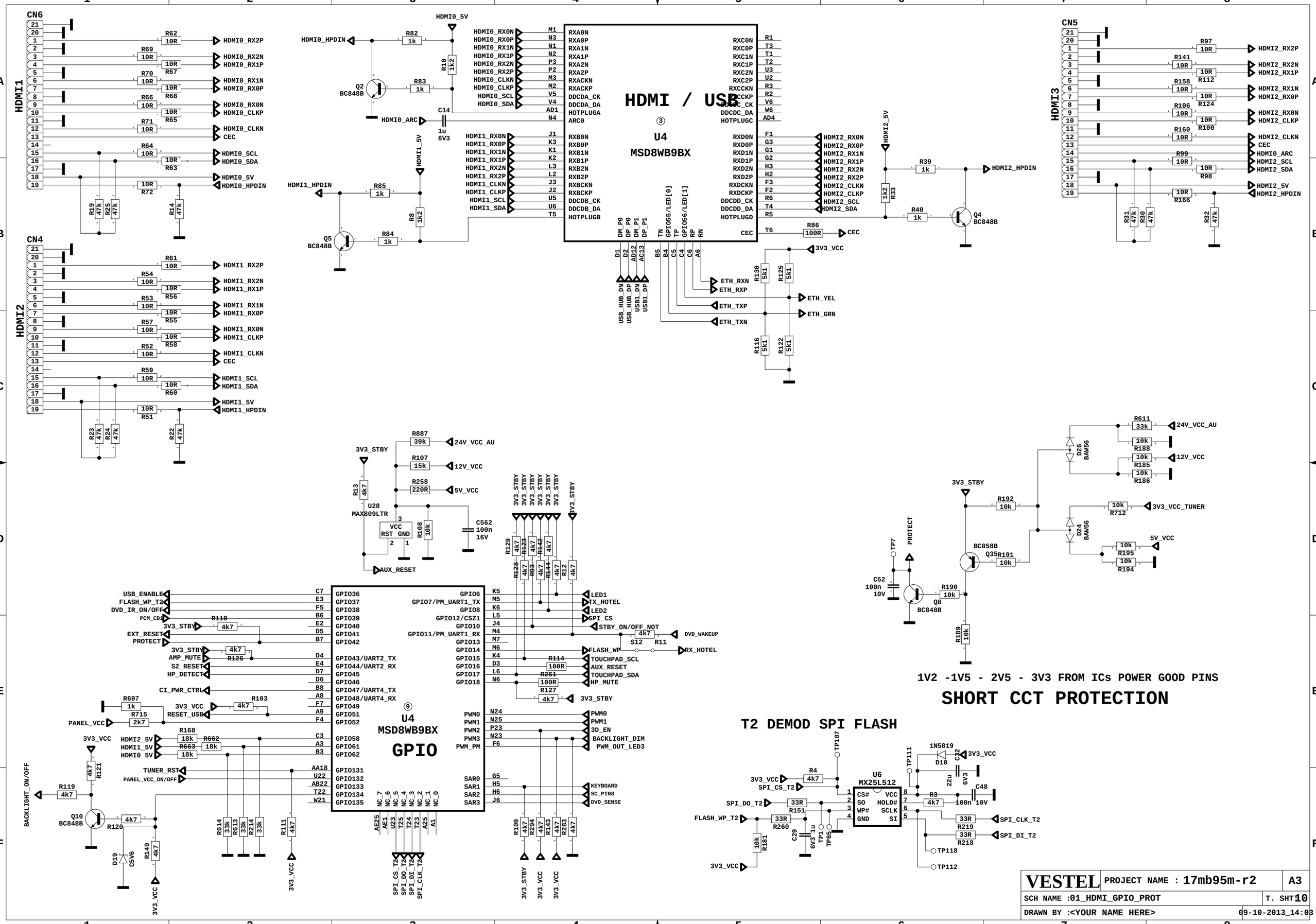
HDMI / USB
U4
MSD8WB9BX
GPIO
HDMI1
HDMI2
HDMI3
CN6
CN4
CN5
HDMI0_5V
HDMI0_HPDIN
HDMI0_ARC
HDMI1_HPDIN
HDMI1_5V
HDMI2_5V
HDMI2_HPDIN
3V3_VCC
3V3_STBY
24V_VCC_AU
12V_VCC
5V_VCC
3V3_VCC_TUNER
AUX_RESET
PROTECT
1V2 -1V5 - 2V5 - 3V3 FROM ICs POWER GOOD PINS
SHORT CCT PROTECTION
T2 DEMOD SPI FLASH
U6
MX25L512
U28
MAX809LTR
VESTEL
PROJECT NAME : 17mb95m-r2
A3
SCH NAME :01_HDMI_GPIO_PROT
T. SHT 10
DRAWN BY :<YOUR NAME HERE>
09-10-2013_14:03

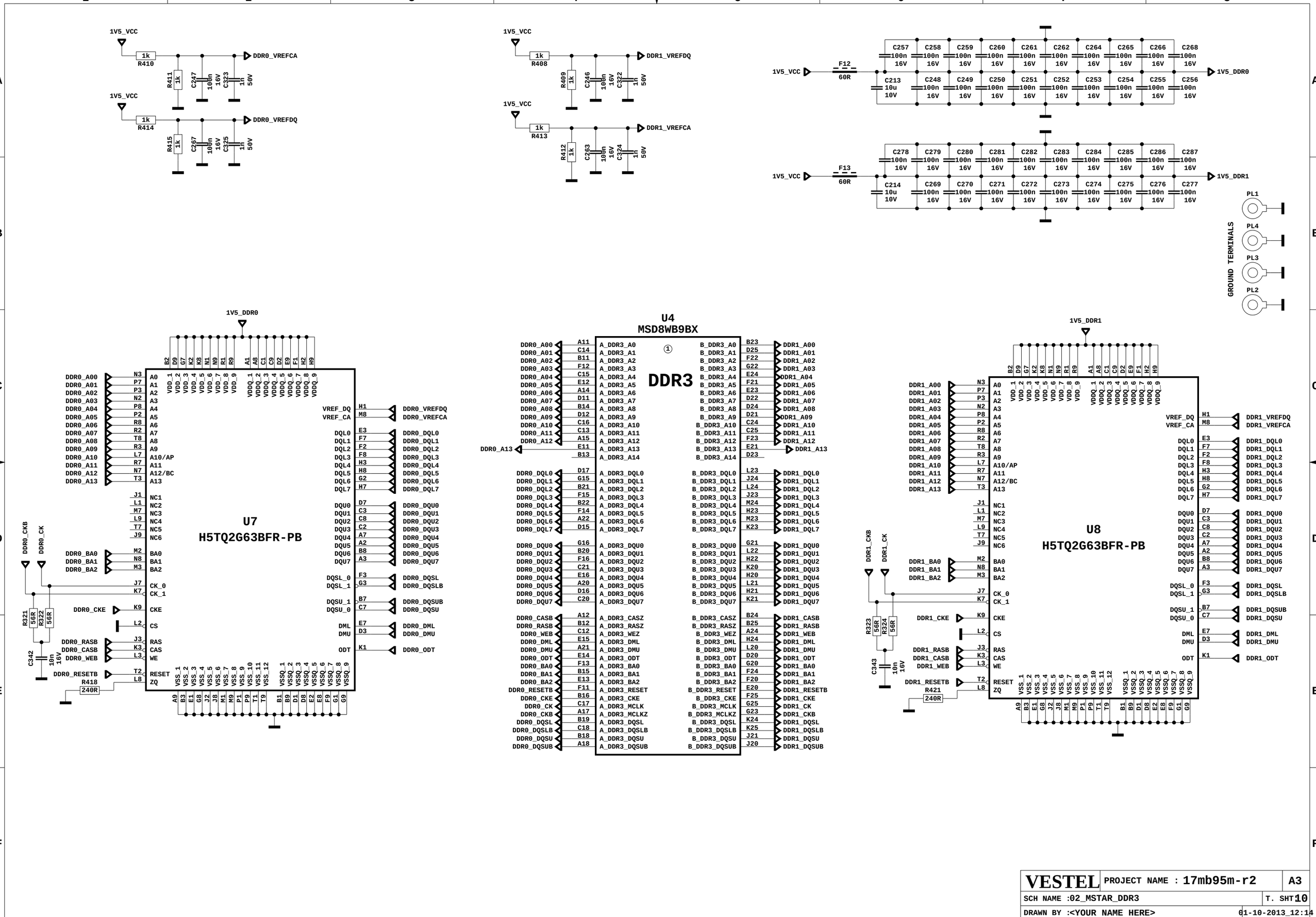

VESTEL	PROJECT NAME : 17mb95m-r2	A3
SCH NAME :02_MSTAR_DDR3		T. SHT 10
DRAWN BY :<YOUR NAME HERE>		01-10-2013_12:14

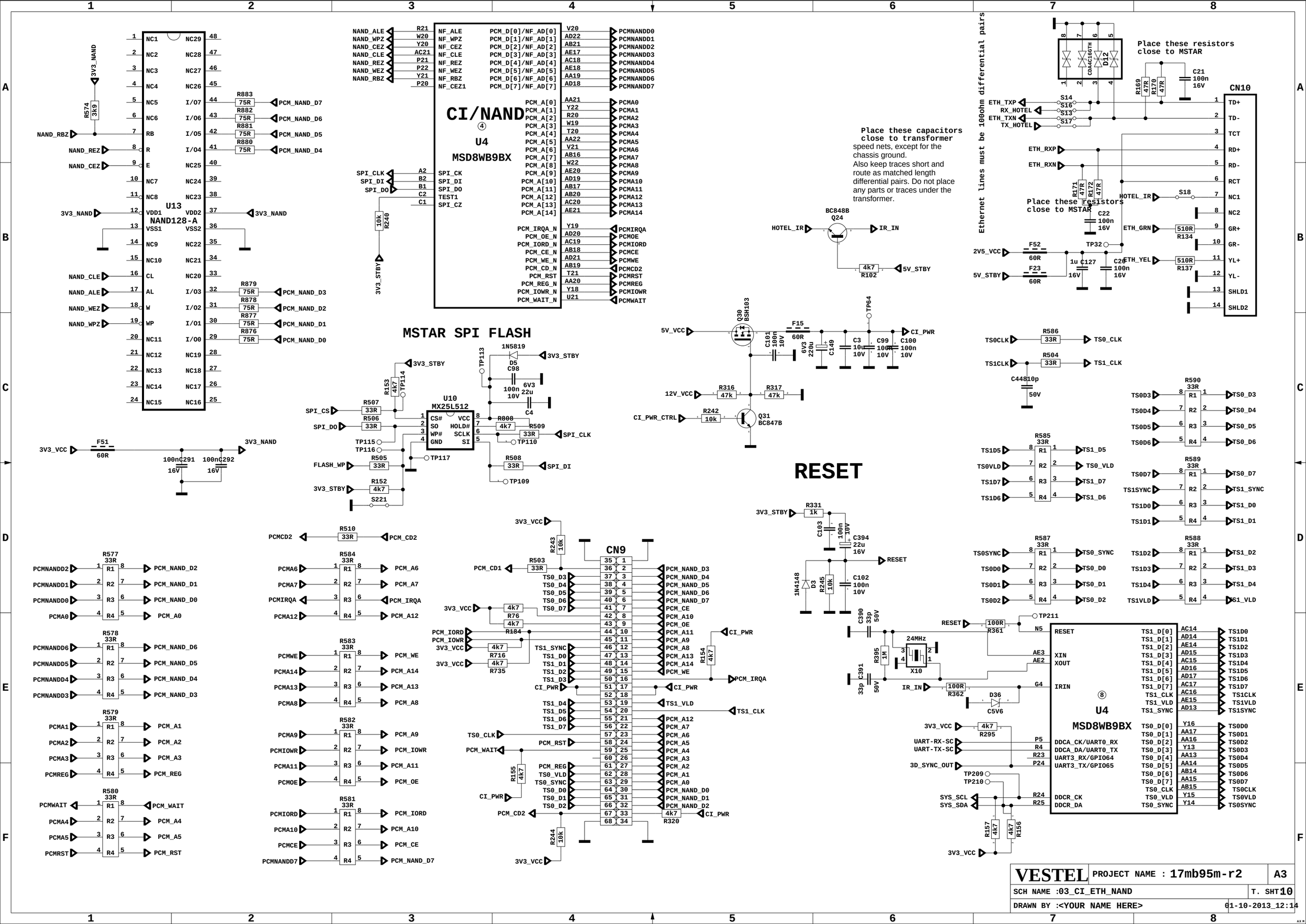
U13
NAND128-A
U4
MSD8WB9BX
CI/NAND
MSTAR SPI FLASH
U10
MX25L512
RESET
CN9
CN10
Place these capacitors close to transformer
speed nets, except for the chassis ground.
Also keep traces short and route as matched length differential pairs. Do not place any parts or traces under the transformer.
Place these resistors close to MSTAR
Ethernet lines must be 100ohm differential pairs
VESTEL
PROJECT NAME : 17mb95m-r2
A3
SCH NAME :03_CI_ETH_NAND
T. SHT 10
DRAWN BY :<YOUR NAME HERE>
01-10-2013_12:14

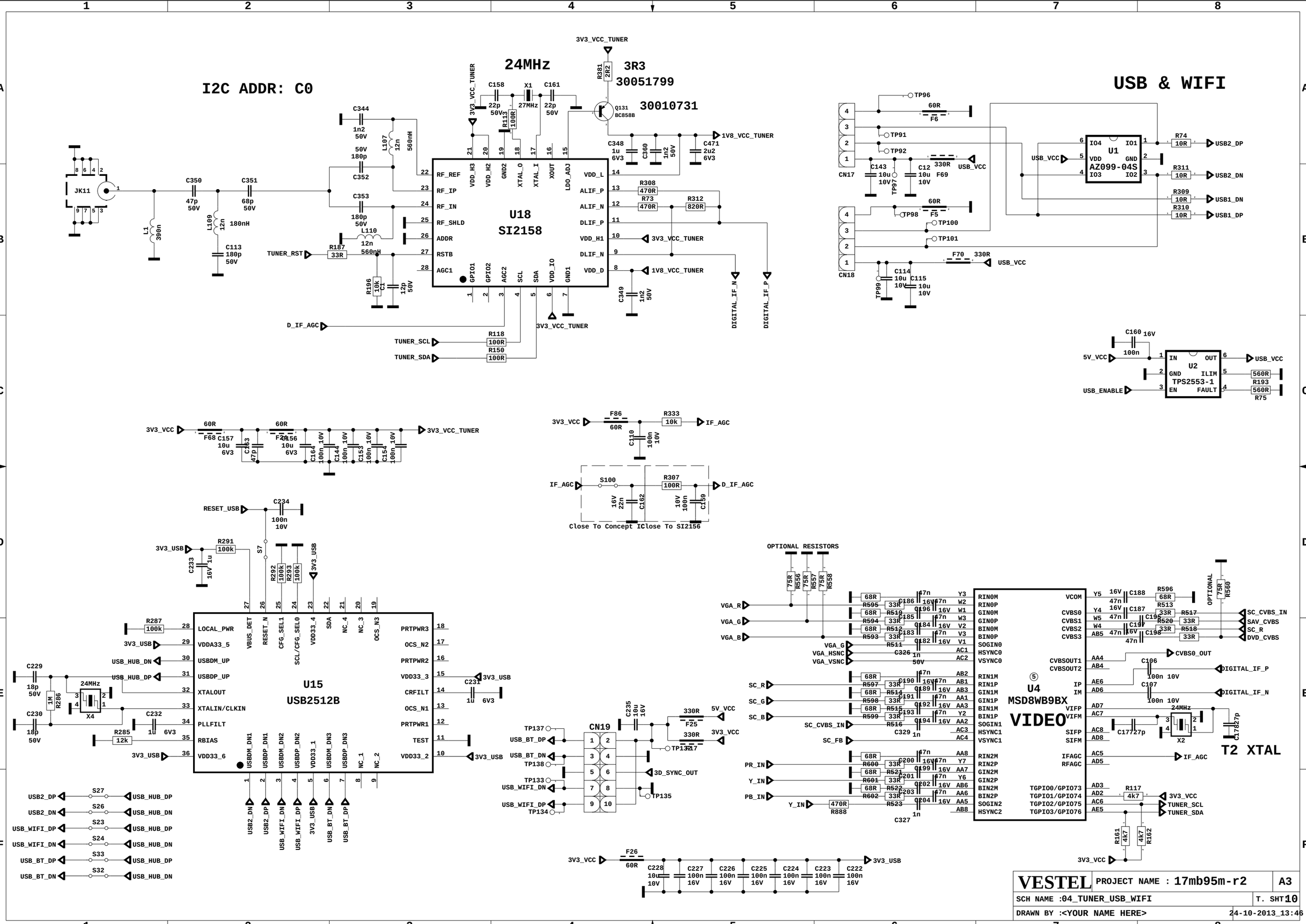
I2C ADDR: C0
24MHz
3R3
30051799
30010731
USB & WIFI
U18
SI2158
U15
USB2512B
U4
MSD8WB9BX
VIDEO
U1
AZ099-04S
U2
TPS2553-1
T2 XTAL
CN19
JK11
CN17
CN18
X1
Q131
BC858B
X4
X2
S7
S100
Close To Concept IClose To SI2156
OPTIONAL RESISTORS
3V3_VCC_TUNER
1V8_VCC_TUNER
TUNER_RST
D_IF_AGC
TUNER_SCL
TUNER_SDA
DIGITAL_IF_N
DIGITAL_IF_P
USB_VCC
5V_VCC
USB_ENABLE
IF_AGC
3V3_VCC
3V3_USB
RESET_USB
USB_HUB_DN
USB_HUB_DP
USB2_DP
USB2_DN
USB_WIFI_DP
USB_WIFI_DN
USB_BT_DP
USB_BT_DN
3D_SYNC_OUT
SC_CVBS_IN
SAV_CVBS
SC_R
DVD_CVBS
CVBS0_OUT
VGA_R
VGA_G
VGA_B
VGA_HSNC
VGA_VSNC
SC_G
SC_B
SC_FB
PR_IN
Y_IN
PB_IN
OPTIONAL
VESTEL
PROJECT NAME : 17mb95m-r2
A3
SCH NAME :04_TUNER_USB_WIFI
T. SHT 10
DRAWN BY :<YOUR NAME HERE>
24-10-2013_13:46

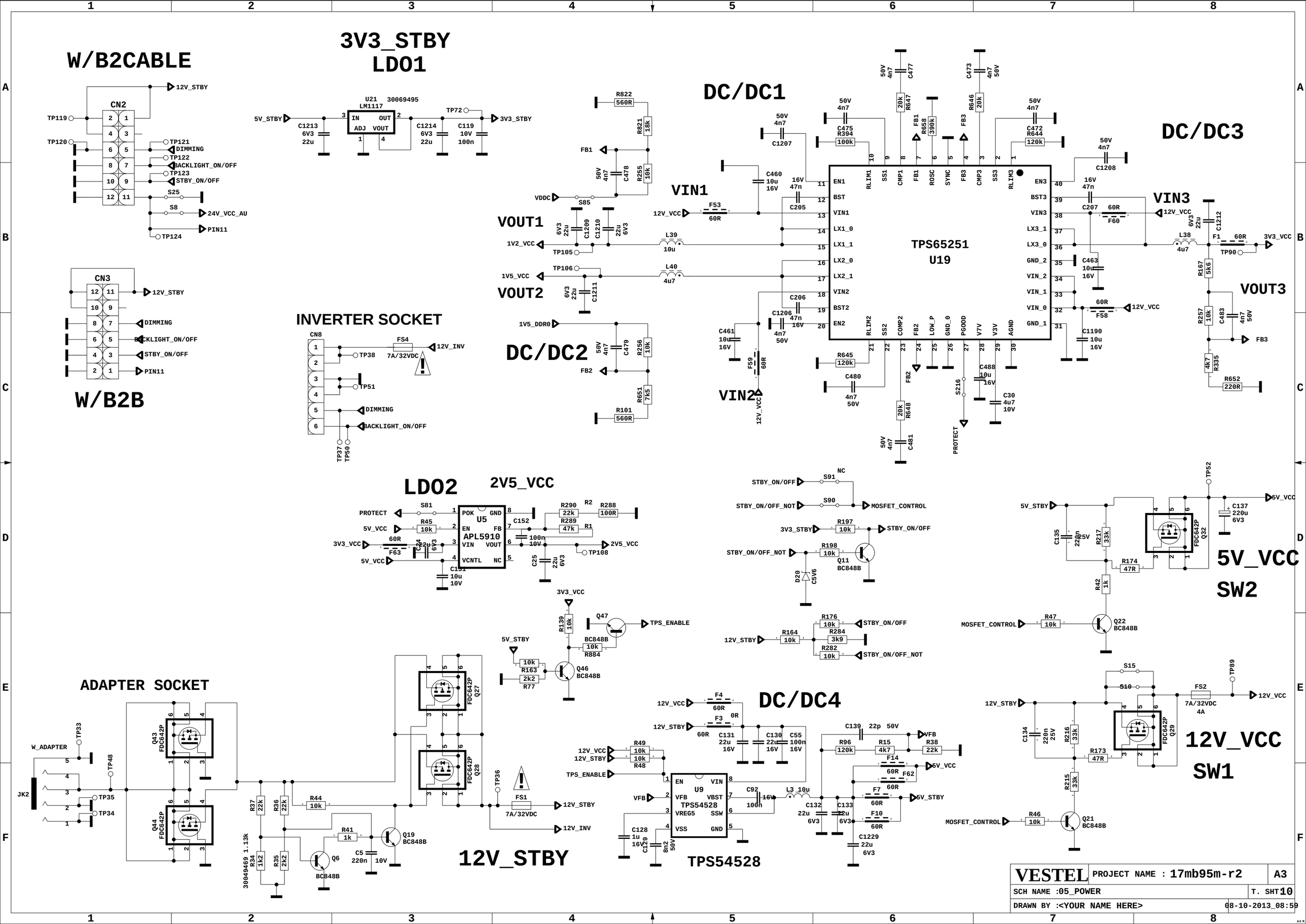
W/B2CABLE
CN2
12V_STBY
TP119
TP120
TP121
DIMMING
TP122
BACKLIGHT_ON/OFF
TP123
STBY_ON/OFF
S25
S8
24V_VCC_AU
PIN11
TP124
CN3
12V_STBY
DIMMING
BACKLIGHT_ON/OFF
STBY_ON/OFF
PIN11
W/B2B
3V3_STBY
LD01
U21 30069495
LM1117
IN OUT
ADJ VOUT
5V_STBY
C1213 6V3 22u
C1214 6V3 22u
C119 10V 100n
TP72
3V3_STBY
INVERTER SOCKET
CN8
FS4
7A/32VDC
12V_INV
TP38
TP51
DIMMING
BACKLIGHT_ON/OFF
TP37
TP50
DC/DC1
DC/DC2
DC/DC3
DC/DC4
TPS65251
U19
VIN1
VIN2
VIN3
VOUT1
VOUT2
VOUT3
12V_VCC
3V3_VCC
1V2_VCC
1V5_VCC
1V5_DDR0
VDDC
S85
F53 60R
L39 10u
L40 4u7
L38 4u7
F60 60R
F58 60R
F59 60R
R822 560R
R101 560R
R167 5k6
R257 10k
R335 4k7
R652 220R
PROTECT
LD02
2V5_VCC
APL5910
U5
POK GND
EN FB
VIN VOUT
VCNTL NC
PROTECT
5V_VCC
3V3_VCC
F63 60R
S81
R45 10k
R290 22k
R288 100R
R289 47k
C152 100n 10V
C25 22u 6V3
TP108
2V5_VCC
STBY_ON/OFF
STBY_ON/OFF_NOT
S91
S90
MOSFET_CONTROL
R197 10k
R198 10k
Q11 BC848B
D20 C5V6
R176 10k
R284 3k9
R282 10k
R164 10k
12V_STBY
5V_STBY
TP52
C137 220u 6V3
C135 220n 25V
R217 33k
R174 47R
R42 1k
FDC642P Q32
5V_VCC
SW2
MOSFET_CONTROL
R47 10k
Q22 BC848B
3V3_VCC
R139 10k
Q47
TPS_ENABLE
BC848B
R884 10k
R163 10k
R77 2k2
Q46 BC848B
ADAPTER SOCKET
W_ADAPTER
TP33
TP48
JK2
TP35
TP34
Q43 FDC642P
Q44 FDC642P
FDC642P Q27
FDC642P Q28
R37 22k
R36 22k
R44 10k
R41 1k
R34 1k2
R35 2k2
30049469 1.13k
Q6 BC848B
C5 220n 10V
Q19 BC848B
TP36
FS1
7A/32VDC
12V_STBY
12V_INV
12V_STBY
DC/DC4
F4 60R
F3 0R
C131 22u 16V
C130 22u 16V
C55 100n 16V
R49 10k
R48 10k
TPS_ENABLE
VFB
U9
TPS54528
EN VIN
VFB VBST
VREG5 SSW
VSS GND
C92 100n
L3 10u
C128 1u 16V
C129 8n2 50V
C139 22p 50V
R96 120k
R15 4k7
R38 22k
F14 60R
F62 60R
F7 60R
F10 60R
C132 22u 6V3
C133 22u 6V3
C1229 22u 6V3
5V_VCC
5V_STBY
TPS54528
S15
S10
FS2
7A/32VDC 4A
TP89
12V_VCC
12V_STBY
C134 220n 25V
R216 33k
R173 47R
R215 33k
FDC642P Q29
12V_VCC
SW1
MOSFET_CONTROL
R46 10k
Q21 BC848B
VESTEL
PROJECT NAME : 17mb95m-r2
A3
SCH NAME :05_POWER
T. SHT 10
DRAWN BY :<YOUR NAME HERE>
08-10-2013_08:59

FHD 50Hz 3D FFC

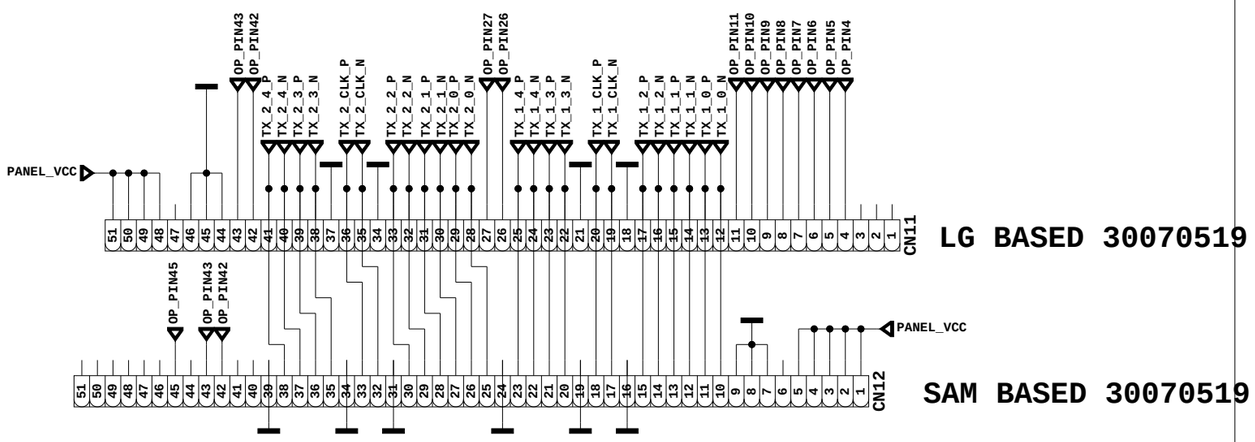

LG BASED 30070519

SAM BASED 30070519

19" TO 22" DOUBLE LVDS FFC OPTIONS

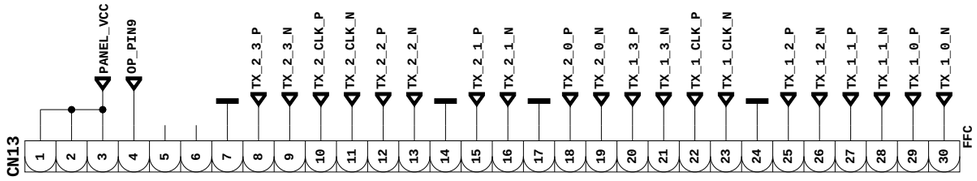

WXGA FFC

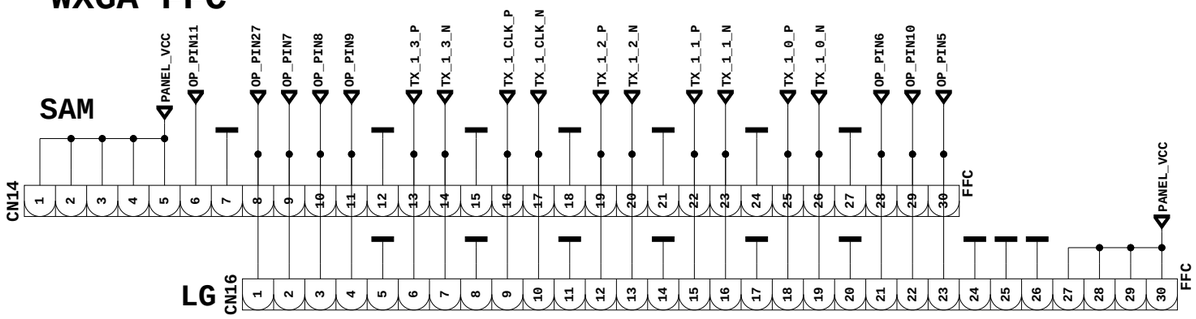

OPTIONS TABLE

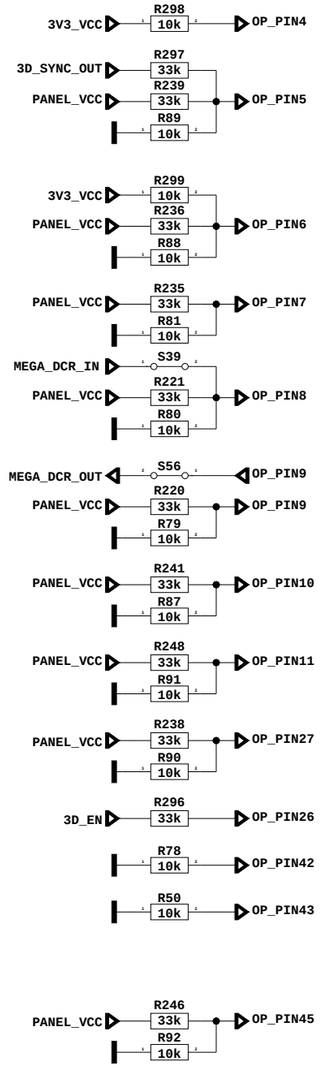

PANEL SUPPLY SWITCH

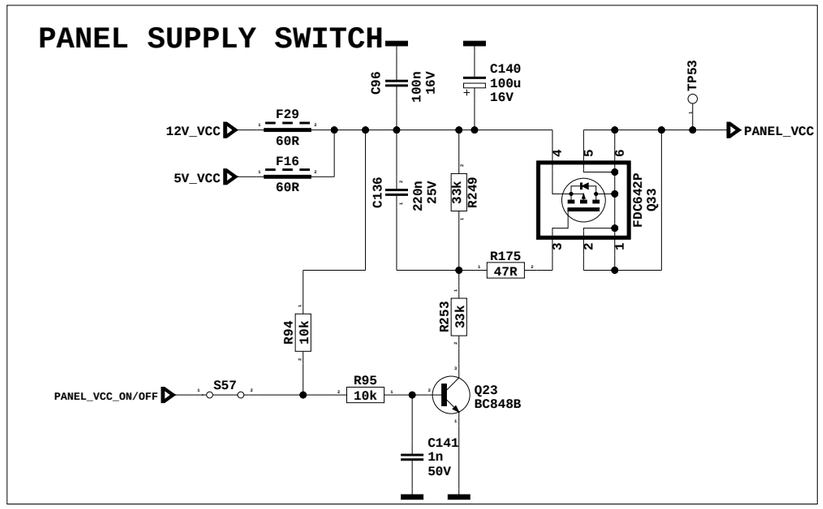

LVDS OUT

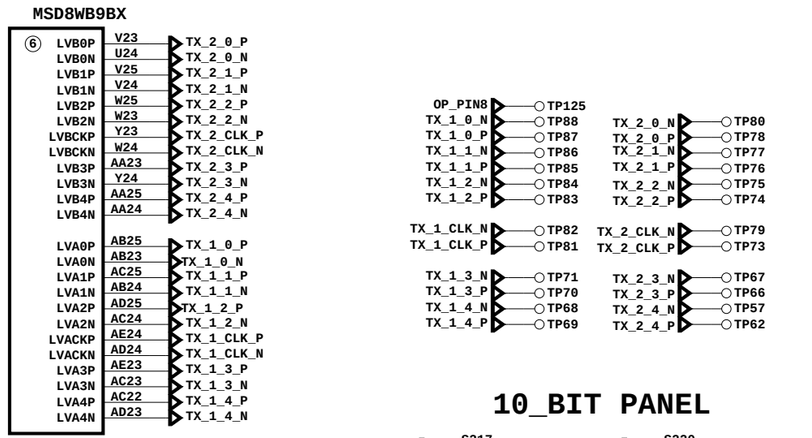

10_BIT PANEL

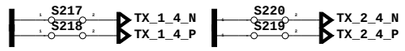

DIMMING

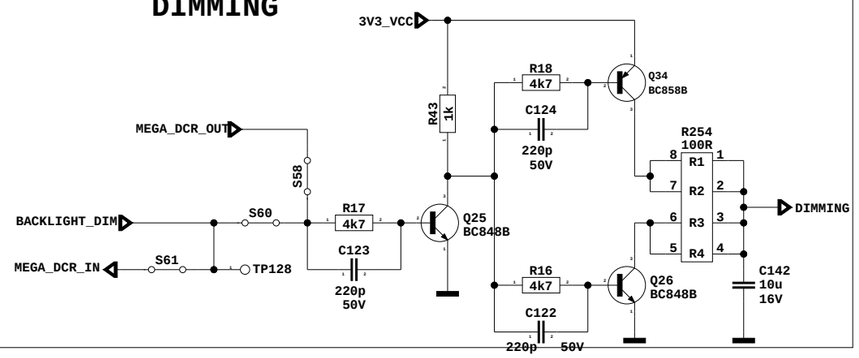

VESTEL	PROJECT NAME : 17mb95m-r2	A3
SCH NAME :06_LVDS		T. SHT 10
DRAWN BY :<YOUR NAME HERE>		01-10-2013_12:14

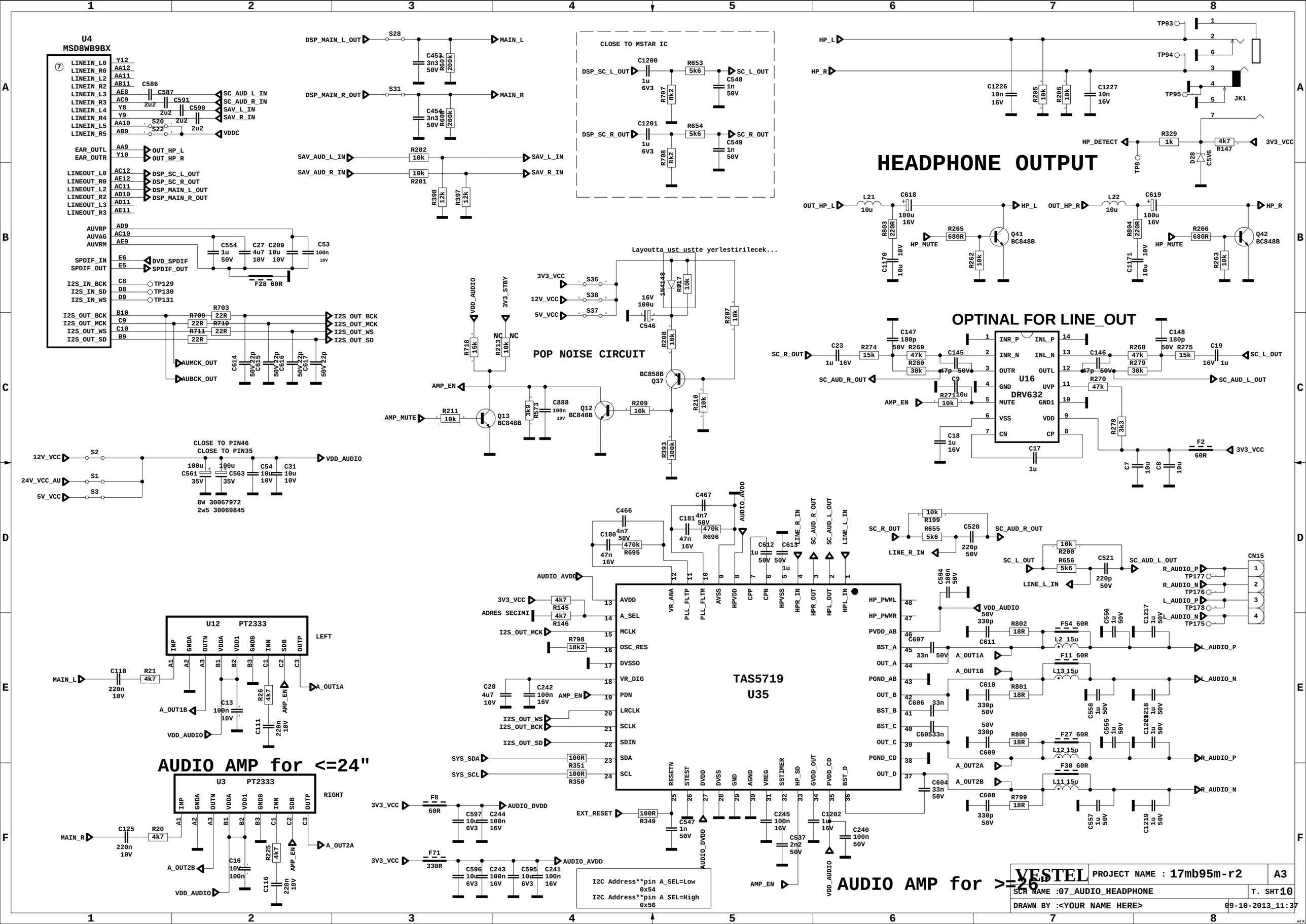
U4
MSD8WB9BX
LINEIN_L0
LINEIN_R0
LINEIN_L2
LINEIN_R2
LINEIN_L3
LINEIN_R3
LINEIN_L4
LINEIN_R4
LINEIN_L5
LINEIN_R5
EAR_OUTL
EAR_OUTR
LINEOUT_L0
LINEOUT_R0
LINEOUT_L2
LINEOUT_R2
LINEOUT_L3
LINEOUT_R3
AUVRP
AUVAG
AUVRM
SPDIF_IN
SPDIF_OUT
I2S_IN_BCK
I2S_IN_SD
I2S_IN_WS
I2S_OUT_BCK
I2S_OUT_MCK
I2S_OUT_WS
I2S_OUT_SD
SC_AUD_L_IN
SC_AUD_R_IN
SAV_L_IN
SAV_R_IN
VDDC
OUT_HP_L
OUT_HP_R
DSP_SC_L_OUT
DSP_SC_R_OUT
DSP_MAIN_L_OUT
DSP_MAIN_R_OUT
DVD_SPDIF
SPDIF_OUT
TP129
TP130
TP131
AUMCK_OUT
AUBCK_OUT
DSP_MAIN_L_OUT
MAIN_L
DSP_MAIN_R_OUT
MAIN_R
SAV_AUD_L_IN
SAV_AUD_R_IN
SAV_L_IN
SAV_R_IN
CLOSE TO MSTAR IC
DSP_SC_L_OUT
SC_L_OUT
DSP_SC_R_OUT
SC_R_OUT
HP_L
HP_R
TP93
TP94
TP95
JK1
HP_DETECT
TP8
3V3_VCC
HEADPHONE OUTPUT
OUT_HP_L
HP_L
OUT_HP_R
HP_R
HP_MUTE
Q41 BC848B
Q42 BC848B
Layoutta ust ustte yerlestirilecek...
3V3_VCC
12V_VCC
5V_VCC
VDD_AUDIO
3V3_STBY
NC
AMP_EN
AMP_MUTE
Q13 BC848B
Q12 BC848B
BC858B Q37
POP NOISE CIRCUIT
OPTINAL FOR LINE_OUT
SC_R_OUT
SC_AUD_R_OUT
SC_L_OUT
SC_AUD_L_OUT
U16
DRV632
INR_P
INR_N
OUTR
GND
MUTE
VSS
CN
INL_P
INL_N
OUTL
UVP
GND1
VDD
CP
12V_VCC
24V_VCC_AU
5V_VCC
CLOSE TO PIN46
CLOSE TO PIN35
VDD_AUDIO
8W 30067972
2w5 30069845
U12 PT2333
LEFT
MAIN_L
A_OUT1A
A_OUT1B
VDD_AUDIO
AUDIO AMP for <=24"
U3 PT2333
RIGHT
MAIN_R
A_OUT2A
A_OUT2B
VDD_AUDIO
TAS5719
U35
AVDD
A_SEL
MCLK
OSC_RES
DVSSO
VR_DIG
PDN
LRCLK
SCLK
SDIN
SDA
SCL
ADRES SECIMI
SYS_SDA
SYS_SCL
EXT_RESET
AUDIO_AVDD
AUDIO_DVDD
HP_PWML
HP_PWMR
PVDD_AB
BST_A
OUT_A
PGND_AB
OUT_B
BST_B
BST_C
OUT_C
PGND_CD
OUT_D
A_OUT1A
A_OUT1B
A_OUT2A
A_OUT2B
L_AUDIO_P
L_AUDIO_N
R_AUDIO_P
R_AUDIO_N
CN15
I2C Address**pin A_SEL=Low
0x54
I2C Address**pin A_SEL=High
0x56
AUDIO AMP for >=26"
VESTEL
PROJECT NAME : 17mb95m-r2
A3
SCH NAME :07_AUDIO_HEADPHONE
T. SHT 10
DRAWN BY :<YOUR NAME HERE>
09-10-2013_11:37

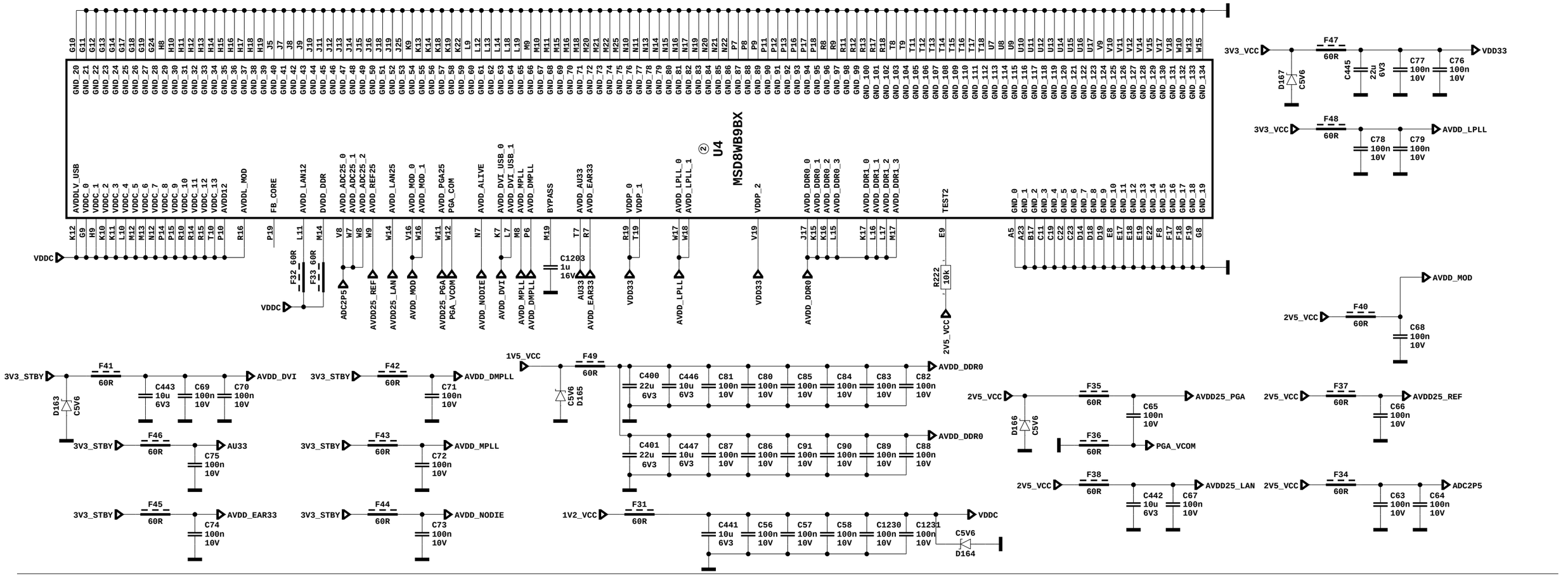

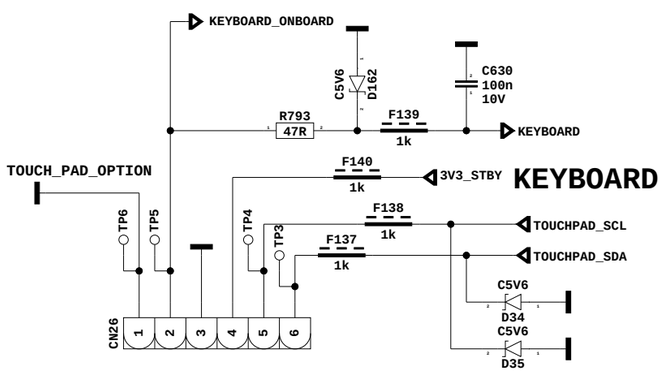

30067087

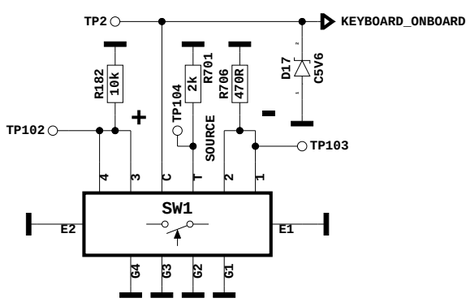

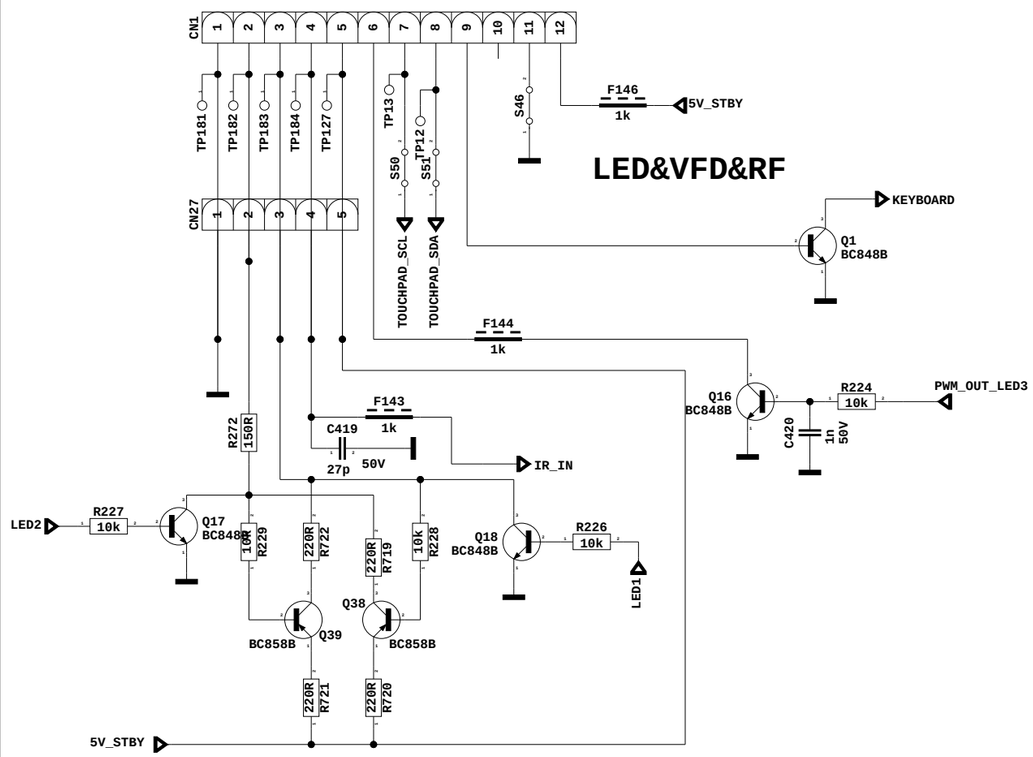

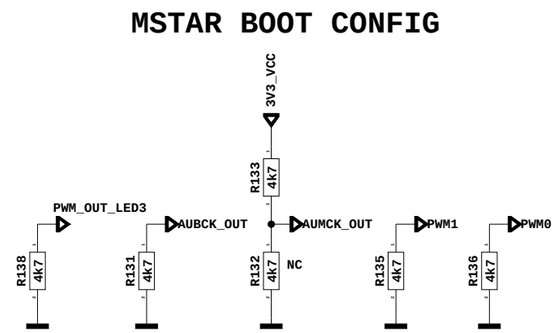

VESTEL	PROJECT NAME : 17mb95m-r2	A3
SCH NAME :08_MST_SUPPLY_KEY_TOUCH		T. SHT 10
DRAWN BY :<YOUR NAME HERE>		11-10-2013_13:14

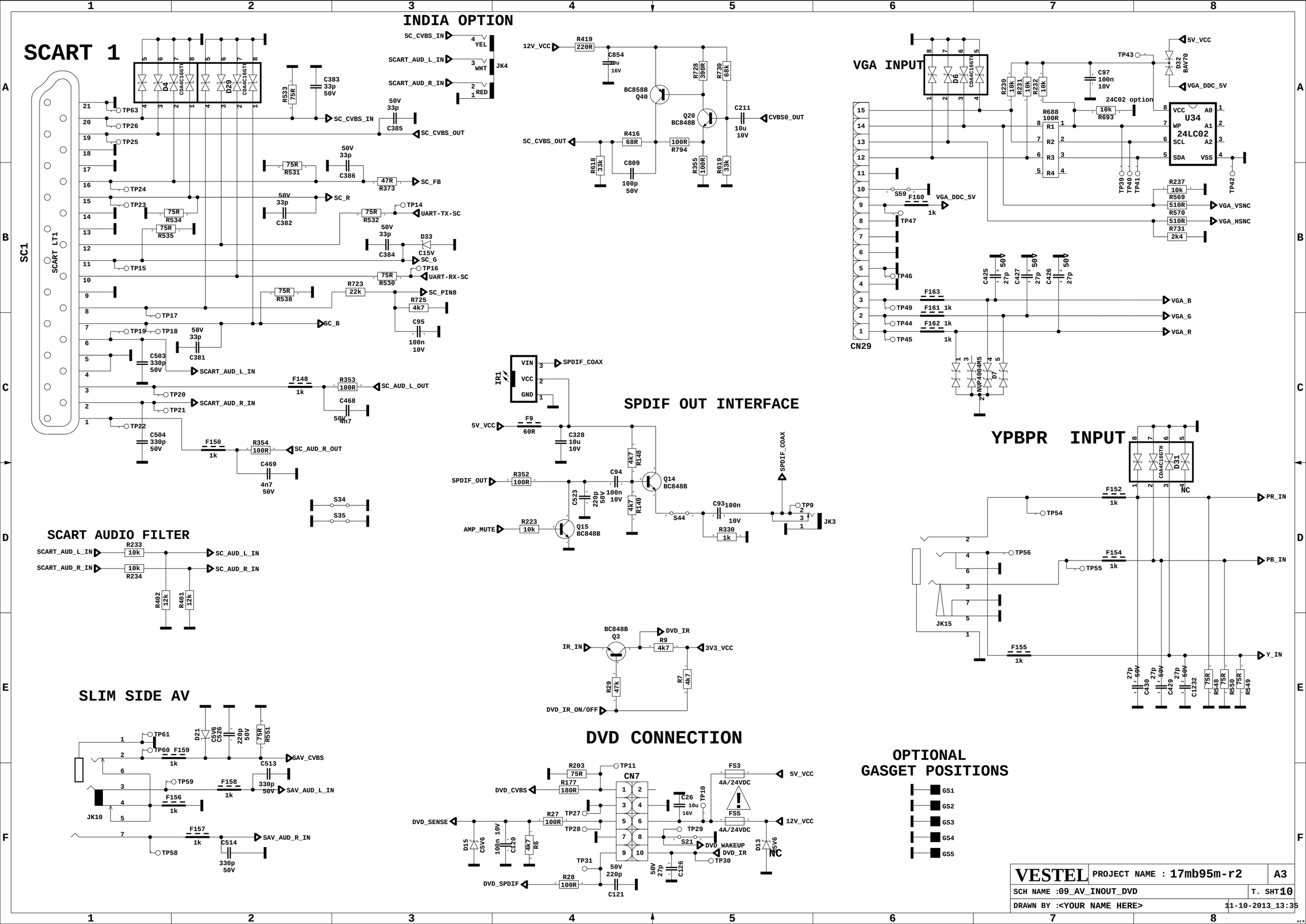
INDIA OPTION
SCART 1
SC1
SCART_LT1
D4
CDA4C16GTH
D29
SC_CVBS_IN
SCART_AUD_L_IN
SCART_AUD_R_IN
JK4
YEL
WHT
RED
R533 75R
C383 33p 50V
C385 33p 50V
SC_CVBS_OUT
R531 75R
C386 33p 50V
R373 47R
SC_FB
SC_R
C382 33p 50V
R534 75R
R535 75R
R532 75R
UART-TX-SC
C384 33p 50V
D33 C15V
SC_G
R530 75R
UART-RX-SC
R538 75R
R723 22k
SC_PIN8
R725 4k7
C95 100n 10V
SC_B
C381 33p 50V
C503 330p 50V
SCART_AUD_L_IN
F148 1k
R353 100R
SC_AUD_L_OUT
C468 4n7 50V
SCART_AUD_R_IN
C504 330p 50V
F150 1k
R354 100R
SC_AUD_R_OUT
C469 4n7 50V
S34
S35
12V_VCC
R419 220R
C854 10u 16V
BC858B Q40
R728 390R
R730 68k
Q20 BC848B
C211 10u 10V
CVBS0_OUT
SC_CVBS_OUT
R416 68R
R794 100R
R618 33k
C809 100p 50V
R355 100R
R619 33k
VGA INPUT
D6
CDA4C16GTH
R230 10k
R231 10k
R232 10k
C97 100n 10V
TP43
5V_VCC
D32 BAV70
VGA_DDC_5V
24C02 option
R693 10k
R688 100R
U34
24LC02
VCC
WP
SCL
SDA
A0
A1
A2
VSS
TP39
TP40
TP41
TP42
R237 10k
R569 510R
R570 510R
R731 2k4
VGA_VSNC
VGA_HSNC
S59
F160 1k
TP47
TP46
C425 27p 50V
C427 27p 50V
C426 27p 50V
F163
F161 1k
F162 1k
TP49
TP44
TP45
VGA_B
VGA_G
VGA_R
CN29
NUP4004M5
D7
IR1
VIN
VCC
GND
SPDIF_COAX
5V_VCC
F9 60R
C328 10u 10V
SPDIF OUT INTERFACE
SPDIF_OUT
R352 100R
C523 220p 50V
C94 100n 10V
4k7 R148
4k7 R149
Q14 BC848B
AMP_MUTE
R223 10k
Q15 BC848B
S44
C93 100n 10V
R330 1k
TP9
JK3
YPBPR INPUT
D31
CDA4C16GTH
NC
F152 1k
PR_IN
TP54
TP56
TP55
F154 1k
PB_IN
JK15
F155 1k
Y_IN
C430 27p 50V
C429 27p 50V
C1232 27p 50V
R548 75R
R550 75R
R549 75R
SCART AUDIO FILTER
SCART_AUD_L_IN
SCART_AUD_R_IN
R233 10k
R234 10k
SC_AUD_L_IN
SC_AUD_R_IN
R402 12k
R401 12k
BC848B Q3
IR_IN
DVD_IR
R9 4k7
3V3_VCC
R29 47k
R7 4k7
DVD_IR_ON/OFF
SLIM SIDE AV
TP61
TP60
F159 1k
D21
C576 C526
220p 50V
75R R551
SAV_CVBS
C513 330p 50V
TP59
F158 1k
SAV_AUD_L_IN
F156 1k
JK10
F157 1k
SAV_AUD_R_IN
C514 330p 50V
TP58
DVD CONNECTION
R203 75R
TP11
CN7
R177 180R
DVD_CVBS
FS3 4A/24VDC
5V_VCC
C26 10u 16V
TP10
R27 100R
TP27
TP28
DVD_SENSE
FS5 4A/24VDC
12V_VCC
TP29
S21
DVD_WAKEUP
DVD_IR
TP30
D15 C5V6
100n 10V C120
4k7 R6
D13 C5V6
NC
TP31
R28 100R
50V 220p C121
50V 27p C126
DVD_SPDIF
OPTIONAL GASGET POSITIONS
GS1
GS2
GS3
GS4
GS5
VESTEL
PROJECT NAME : 17mb95m-r2
A3
SCH NAME :09_AV_INOUT_DVD
T. SHT 10
DRAWN BY :<YOUR NAME HERE>
11-10-2013_13:35

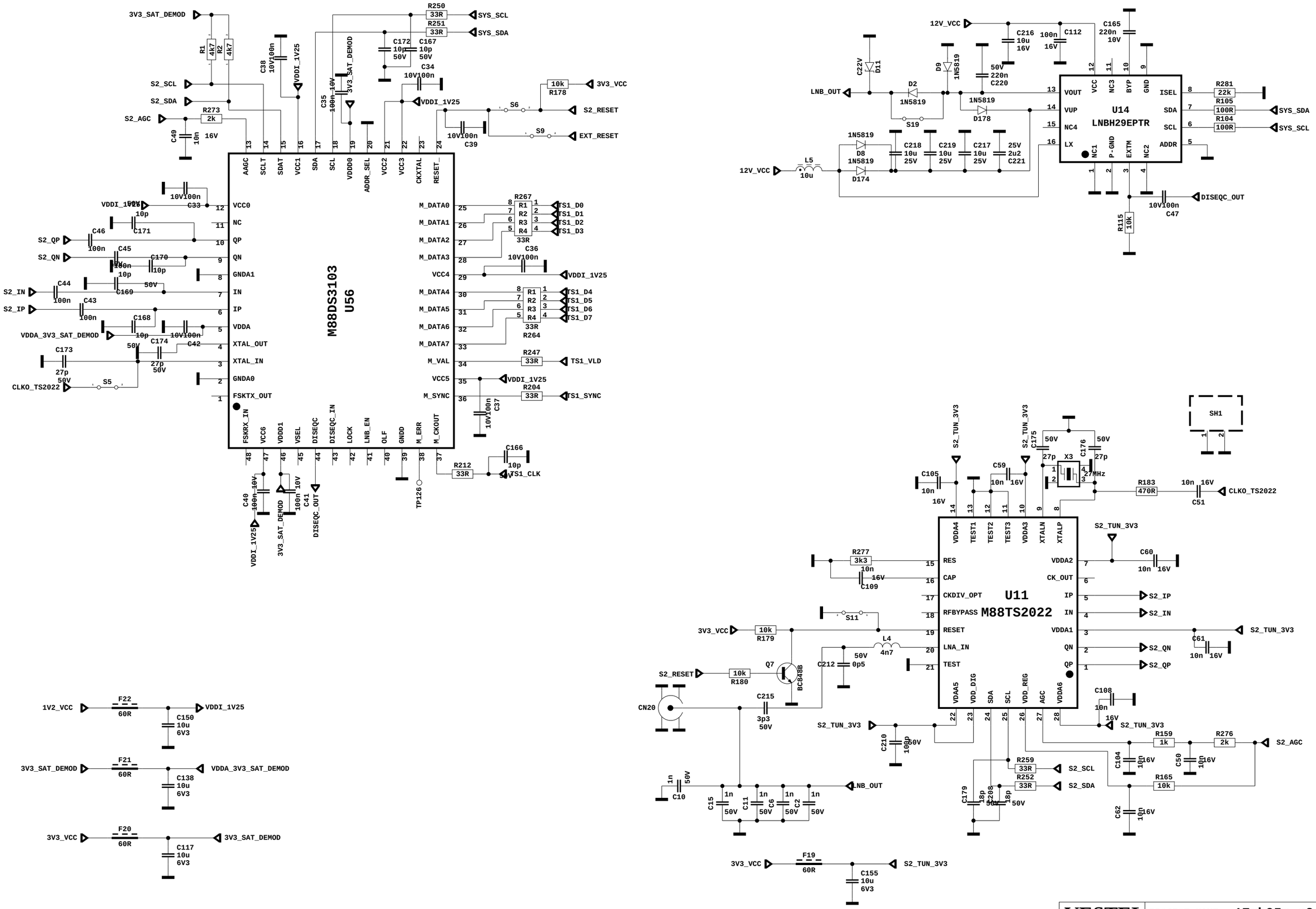

VESTEL	PROJECT NAME : 17mb95m-r2	A3
SCH NAME :10_SAT		T. SHT 10
DRAWN BY :<YOUR NAME HERE>		08-10-2013_10:12

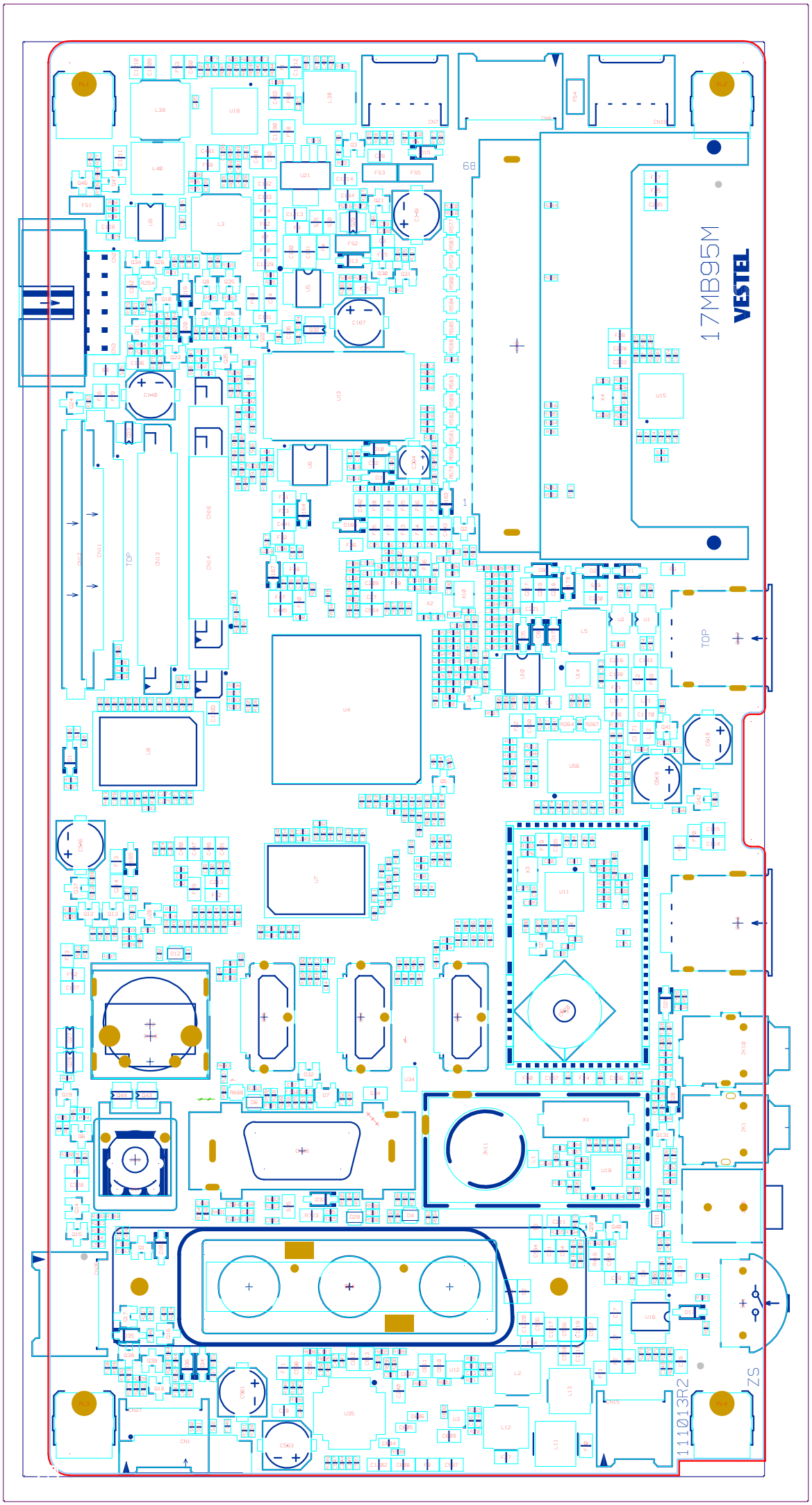
17MB95M
VESTEL
TOP
TOP
111013R2
ZS