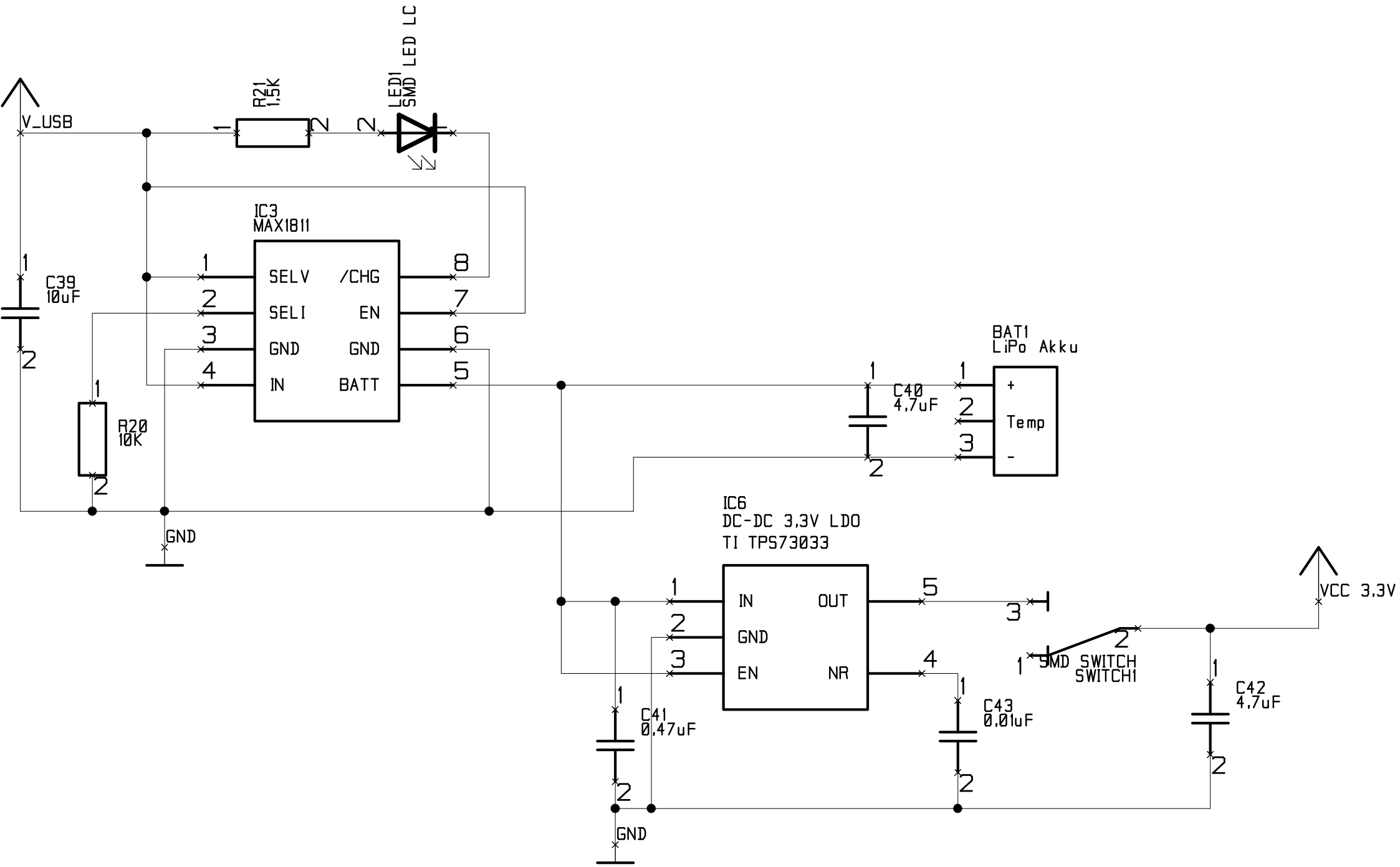
V_USB
R21
1,5K
LED1
SMD LED LC
IC3
MAX1811
SELV
SELI
GND
IN
/CHG
EN
GND
BATT
C39
10uF
R20
10K
GND
C40
4,7uF
BAT1
LiPo Akku
+
Temp
-
IC6
DC-DC 3,3V LDO
TI TPS73033
IN
GND
EN
OUT
NR
C41
0,47uF
C43
0,01uF
SMD SWITCH
SWITCH1
C42
4,7uF
VCC 3,3V
GND