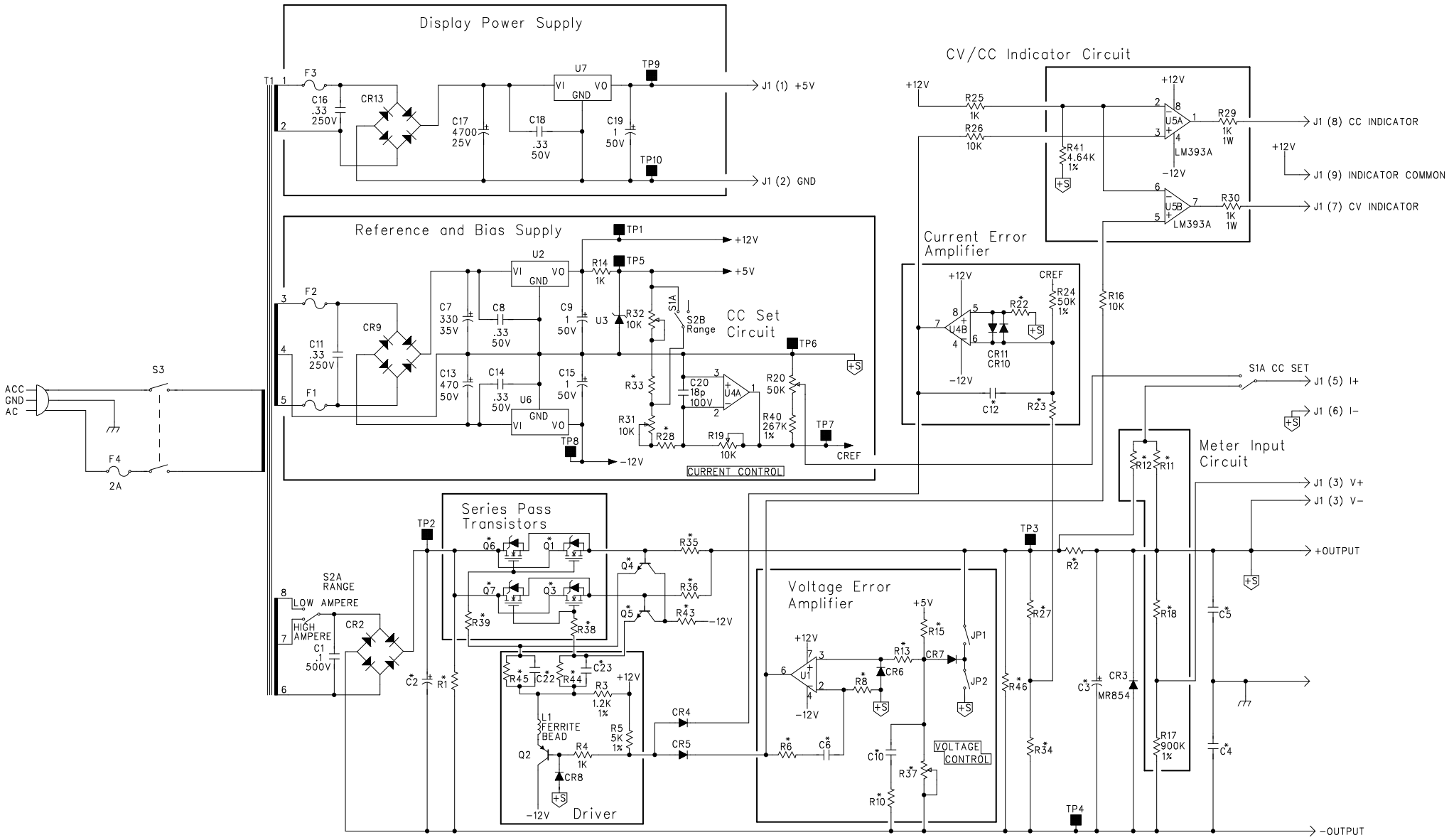

Display Power Supply
Reference and Bias Supply
CC Set Circuit
CURRENT CONTROL
CV/CC Indicator Circuit
Current Error Amplifier
Meter Input Circuit
Series Pass Transistors
Voltage Error Amplifier
VOLTAGE CONTROL
Driver
J1 (1) +5V
J1 (2) GND
J1 (8) CC INDICATOR
J1 (9) INDICATOR COMMON
J1 (7) CV INDICATOR
S1A CC SET
J1 (5) I+
J1 (6) I−
J1 (3) V+
J1 (3) V−
+OUTPUT
−OUTPUT
ACC
GND
AC
S3
F4
2A
S2A RANGE
LOW AMPERE
HIGH AMPERE
S2B Range
L1 FERRITE BEAD
LM393A
MR854