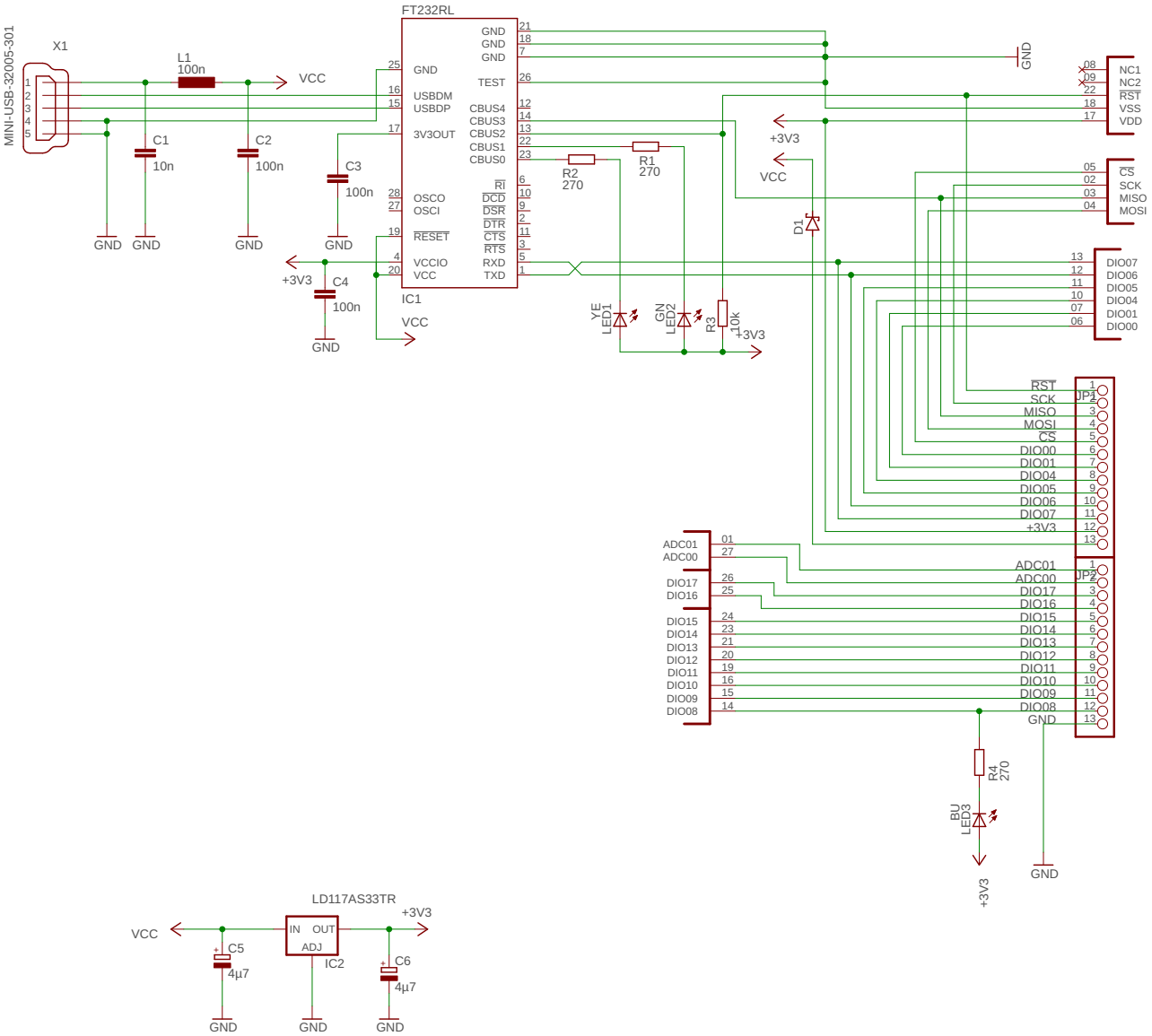

NXP JN5168 Prog. Adapter

TITLE: E75-2G4M20S-BEE

Document Number:

REV:

Date: 26.01.19 19:06

Sheet: 1/1