Service
Service
Service

Service Manual

Horizontal Frequency
31~48 KHz

TABLE OF CONTENTS

Description	Page
Table of Contents	1
Important Safety Notice	2
Revision List	3
1. General Specification	4
2. Operating Instructions	6
2.1 The Use of Remote Control	6
2.2 To Use the Menus	7
2.3 How to Connect	16
2.4 Front Panel Control Knobs	23
3. Input/Output Specification	25
4. Mechanical Instructions	29
5. Repair Flow Chart	31
6. PCB Layout	35
6.1 Main Board	35
6.2 Power Board	39
6.3 Key Board	49
6.4 IR Board	49
7. Adjustment	50
8. Block Diagram	51
9. Wiring Diagram	52
10. Schematic Diagram	54
10.1 Main Board	54
10.2 Power Board	70
10.3 Key Board	77
10.4 IR Board	78
11. Exploded View	80
12. BOM List	84

SAFETY NOTICE

ANY PERSON ATTEMPTING TO SERVICE THIS CHASSIS MUST FAMILIARIZE HIMSELF WITH THE CHASSIS AND BE AWARE OF THE NECESSARY SAFETY PRECAUTIONS TO BE USED WHEN SERVICING ELECTRONIC EQUIPMENT CONTAINING HIGH VOLTAGES.

CAUTION: USE A SEPARATE ISOLATION TRANSFOMER FOR THIS UNIT WHEN SERVICING

Downloaded from www.Manualslib.com manuals search engine

Important Safety Notice

Proper service and repair is important to the safe, reliable operation of all Haier Company Equipment. The service procedures recommended by Haier and described in this service manual are effective methods of performing service operations. Some of these service operations require the use of tools specially designed for the purpose. The special tools should be used when and as recommended.

It is important to note that this manual contains various CAUTIONS and NOTICES which should be carefully read in order to minimize the risk of personal injury to service personnel. The possibility exists that improper service methods may damage the equipment. It is also important to understand that these CAUTIONS and NOTICES ARE NOT EXHAUSTIVE. Haier could not possibly know, evaluate and advise the service trade of all conceivable ways in which service might be done or of the possible hazardous consequences of each way. Consequently, Haier has not undertaken any such broad evaluation. Accordingly, a servicer who uses a service procedure or tool which is not recommended by Haier must first satisfy himself thoroughly that neither his safety nor the safe operation of the equipment will be jeopardized by the service method selected.
Hereafter throughout this manual, Haier Company will be referred to as Haier.

WARNING

Use of substitute replacement parts, which do not have the same, specified safety characteristics might create shock, fire, or other hazards.

Under no circumstances should the original design be modified or altered without written permission from Haier. Haier assumes no liability, express or implied, arising out of any unauthorized modification of design.
Servicer assumes all liability.

FOR PRODUCTS CONTAINING LASER:
DANGER-Invisible laser radiations when open AVOID DIRECT EXPOSURE TO BEAM.
CAUTION-Use of controls or adjustments or performance of procedures other than those specified herein may result in hazardous radiation exposure.
CAUTION -The use of optical instruments with this product will increase eye hazard.

TO ENSURE THE CONTINUED RELIABILITY OF THIS PRODUCT, USE ONLY ORIGINAL MANUFACTURER'S REPLACEMENT PARTS, WHICH ARE LISTED WITH THEIR PART NUMBERS IN THE PARTS LIST SECTION OF THIS SERVICE MANUAL.
Take care during handling the LCD module with backlight unit
-Must mount the module using mounting holes arranged in four corners.
-Do not press on the panel, edge of the frame strongly or electric shock as this will result in damage to the screen.
-Do not scratch or press on the panel with any sharp objects, such as pencil or pen as this may result in damage to the panel.
-Protect the module from the ESD as it may damage the electronic circuit (C-MOS).
-Make certain that treatment person’s body is grounded through wristband.
-Do not leave the module in high temperature and in areas of high humidity for a long time.
-Avoid contact with water as it may a short circuit within the module.
-If the surface of panel becomes dirty, please wipe it off with a soft material. (Cleaning with a dirty or rough cloth may damage the panel.)

Downloaded from www.Manualslib.com manuals search engine

Revision List

Version	Release Date	Revision Instructions	Customer Model	Model
A00	Jan.25,2010	Initial release	LT26A1	E26AG2NB3WH72N
			LT32A1	E32AG2NB3WH72N
A01	Mar.15,2010	Add power board		E32AA2NB3WH72N
A02	Jan.05,2011	Add new model	LT32A1	E32AG2NR3WH7NN

Downloaded from www.Manualslib.com manuals search engine

1. General Specification

* This model complies with the specifications listed below.
* Designs and specifications are subject to change without notice.
* These models may not be compatible with features and/or specifications that may be added in the future.

Model No.	LT19A1	LT22A1	LT26A1	LT32A1	LT42A1
DISPLAY					
Viewable	18.5”	22”	26”	32”	42”
Television System	PAL, SECAM standard, DVB-T standard				
CONNECTIONS					
Rear Connectors	**Tuner input (75Ω) PC IN:** D-SUB and PC Audio (Headphone mini-jack) Recommended:1360x768/60Hz **Component Video and L/R Audio input** Supported resolution: 480i, 576i/p, 720p, 1080i, 1080p(42" only) **HDMI input** Supported scan rates: 480p, 480i, 576p, 576i, 720p, 1080i, 1080p(42" only)				
	SCART 1 SPDIF HDMI 1	SCART 1 SPDIF HDMI 1	SCART 1 SCART 2 SPDIF HDMI 1 HDMI 2	SCART 1 SCART 2 SPDIF HDMI 1 HDMI 2	SCART 1 SCART 2 SPDIF HDMI 1 HDMI 2 HDMI 3
	SCART 1: RGB + CVBS in/out + audio in/out SCART 2: S-Video + CVBS in/out + audio in/out				
Side Connectors	COMMON INTERFACE AV In (Composite Audio/ Video) Earphone Output				
WEIGHT & DIMENSIOIN					
Dimensions with Stand (W x H x D)	455x145x388 mm	528x382x175.8 mm	657.2x489.3x219.0 mm	789.5x569.1x239.5 mm	1015.4x703.0x280.5 mm
Weight with Stand	3.7kg	4.8kg	8.0kg	11.1kg	20.5kg
Weight without Stand and Base	3.45kg	4.55kg	6.8kg	9.3kg	17.6kg

Downloaded from www.Manualslib.com manuals search engine

WALL MOUNTING					
VESA-compatible wall bracket (W x H)	100x100 mm	100x100 mm	200x100 mm	200x200 mm	400x200 mm
Screw type	Metric 4x10 mm	Metric 4x10 mm	Metric 4x10 mm	Metric 6x10 mm	Metric 6x10 mm
POWER					
Power Consumption	50W	55W	120W	130W	200W
Standby	< 1W				
Mains Power	AC100-240V~, 50/60Hz	AC100-240V~, 50/60Hz	AC220-240V~, 50/60Hz	AC220-240V~, 50/60Hz	AC220-240V~, 50/60Hz
Audio Power	3W + 3W	3W + 3W	5W + 5W	5W + 5W	10W + 10W
Ambient Temperature	5°C - 35°C				
PACKAGE CONTENTS					
Supplied Accessories	TV unit x1 Power cord x 1 Remote control x1 (with two size AAA alkaline batteries) User manual x1 Setup Guide x1				

Downloaded from www.Manualslib.com manuals search engine

2. Operating Instructions

2.1 The Use of Remote Control

POWER
Press to turn ON/OFF(standby) the TV.

SOURCE
Press repeatedly to choose the various input sources.

Number buttons
Press to enter TV channel number to select channel.

EPG
Press to display the Electronic Programme Guide.

PRE CH
Press to display the previous channel.

HDMI
Press to choose HDMI source mode.

YPbPr
Press to choose YPbPr source mode.
VIDEO
Press to choose AV source mode.
PC
Press to choose PC source mode.
VOL+ / VOL-
Press + or - to adjust the volume.

CH Λ / CH V
Press Λ or V to browse through the TV channels.

MUTE
Switch the sound ON/OFF.

TELETEXT
Press to display or close the Teletext.
MIX
Display the Teletext with TV.

SIZE
Press to change the font size: Full screen, Top half and Bottom half.

SUBPAGE
Display the sub page (when available).

INDEX
Press to return to page 100 or the index page.

SUBTITLE
• In TV mode: It works only for turning on the subtitle and change to the next page marked as subtitle.

ZOOM
Select the display aspect from Auto, Normal (4:3), Wide (16:9), subtitle, full screen, or 14:9 mode.

DUAL
Press to select from mono, stereo, Dual I, or Dual II.

AUDIO ADJ
Press to choose from Personal, Speech, Music.

VIDEO ADJ
Press to choose the Smart Picture mode from Personal, Standard, Movie, Vivid, Eco.

SLEEP
Press to set the preset time to switch the TV to standby mode automatically.

MENU/EXIT
Press to open or close menu.

▲, ▼, ◄, ►, OK
Press to adjust or confirm the various function items on the menu.

INFO
Press to display or close the information screen.

Colour buttons
• In TV mode: Follow the directions in the OSD screen.
• In Text mode: Text control buttons.

HOLD
Press to stop the scrolling of pages. The text decoder stops receiving data.

REVEAL
Reveal hidden information such as answers to a quiz.

FAV
Display the Favourite Channel List.

CH-LIST
Display the Channel List.

USB
Press USB to display the multimedia selection screen.

FREEZE

Downloaded from www.Manualslib.com manuals search engine

2.2 To Use the Menus

1. Press the **MENU/EXIT** button to display or close the main menu
2. Use the **Navigation Ring** to move around to select, adjust or confirm an item in the OSD (On Screen Display) menu.

Press the **MENU/EXIT** button to enter the main OSD. Adjust the items including **Picture, Sound, TV, Features,** and **Parental.**

However, some function items in the menus may only be enabled in the particular source modes.

PICTURE MENU

The Picture menu in most source modes shows as below. It provides several video adjustment items for user fine tuning the video display.

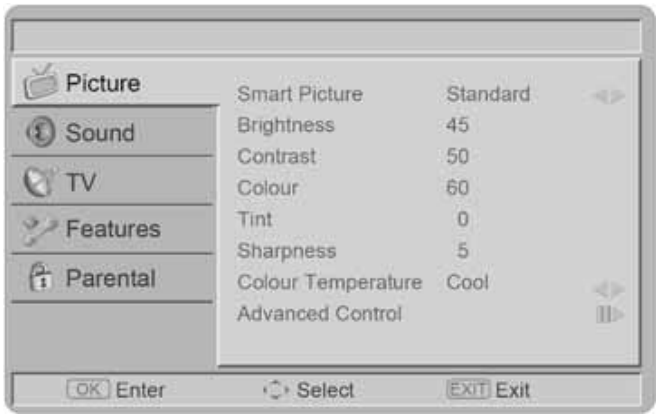

1. **Smart Picture:** To set the best picture appearance to a predefined picture setting from Standard, Vivid, Movie, Eco, or Personal.
2. **Brightness:** To brighten the dark parts of the picture.
3. **Contrast:** To sharpen the picture quality.
4. **Colour:** To add or reduce colour.
5. **Tint:** To adjust the picture tint.
6. **Sharpness:** To improve detail.
7. **Colour Temperature:** To choose between Normal (neutral), Warm (redder), and Cool (bluer).
8. **Advanced Control:**

[Noise Reduction] - To filter out and reduces the image noise and improve picture quality. Select the effect degrees from Off, Low, Medium, High, or Auto.

[Flash Tone] - To adjust the skin colour to be more natural.

[Back Light] - To make the background colour brighter or darker.

[DCR] - Dynamic Contrast Ratio (DCR) auto adjusts the brightness of the screen to show more depths in the darker areas.

[HDMI Mode] - (HDMI only) User can select Auto/graphic/Video mode.

Description as following:

• Auto: Automatic to get device information, device will indicate sending timing is video timing or graphic timing (PC timing).

• Graphic: Force video timing shows as graphic timing, for example: 720p shows 1280x720@60Hz; 1080i shows 1920x1080@60Hz. This mode optimizes for PC input.

• Video: Force graphic timing shows as video timing, for example:

1280x720@60Hz shows 720p;

1920x1080@60Hz shows 1080i.

This mode optimises for DVD player, camcorder, and other video appliances inputs.

Downloaded from www.Manualslib.com manuals search engine

SOUND MENU

The Sound menu provides audio adjustment for user to modify the audio setting.

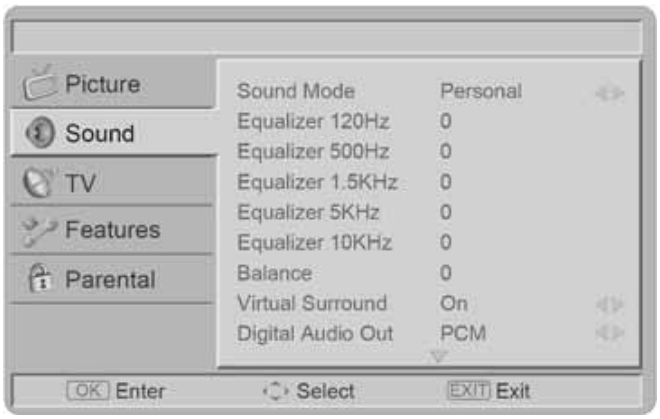

1. **Sound Mode:** To set the TV to a predefined sound setting from Personal, Music, or Speech.
2. **Balance:** To adjust the balance between left and right channels.
3. **Virtual Surround:** To add greater depth and dimension to the TV sound.
4. **Digital Audio Out:** To select the Digital Audio Out from Off or PCM.
5. **SPDIF Delay:** SPDIF Delay function will affect SCART/Line out audio also delay at that time. The Nor Dig HD IRD shall support the possibility to adjust the audio delay on the SPDIF output (if available) up to 250 ms and it should be adjustable in 10ms steps, as the IRD may have several different user set-ups, resulting in different a/v delays; e.g. the IRD may be connected to several types of external audio amplifiers and the STB may be connected to several types of external screens.
6. **AVL:** Choose On or Off to adjust volume to be consistent across programmes and channels automatically.

The following functions are only available for digital channels with audio signals.

7. **Type:** This function enables you to choose the type of the additional narration during the TV watching from Normal, Hard of Hearing, or Audio Description.

Hard of Hearing: This function provides narration to deaf and hard of hearing viewers.

8. **Audio description:** When the Type is set to “Audio Description”, you can adjust the volume of the audio description.

Downloaded from www.Manualslib.com manuals search engine

TV MENU

1. **Country:** To select the relevant country.
This is the country you are in, or the country whose channels you want to receive if you live near its borders.
2. **Audio Carrier (ATV only):** Select Stereo, Dual 1, Dual 2, or Mono for ATV channel.
3. **1st and 2nd Audio:** Use this function when two or more audio languages are broadcast. This is the language to be used for digital channels if it is available.
4. **Channels:** Enter the channels submenu, and choose from Channel Scan, Update Scan, Single RF Scan, Analog Manual Scan, Channel Skip, Channel Sort, Channel Edit, Decoder, and Analog CH Fine Tune.
[Channel scan] - Channel Scan will retune the television automatically. It is recommended to run the Channel Scan periodically to ensure that all new services are added.
[Update scan] - Search the new channels automatically that are not in the channel list.
[Single RF Scan (Digital Only)] - Enter the Single RF Scan in the Channels submenu to scan digital channels.

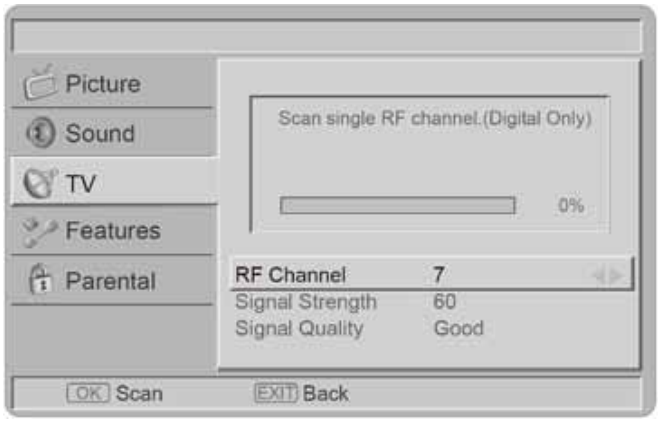

[Analog Manual Scan] - The television can be tuned-in manually using Analog Manual Scan. Use the number keys

Downloaded from www.Manualslib.com manuals search engine

to enter the Start Frequency to scan up or scan down.

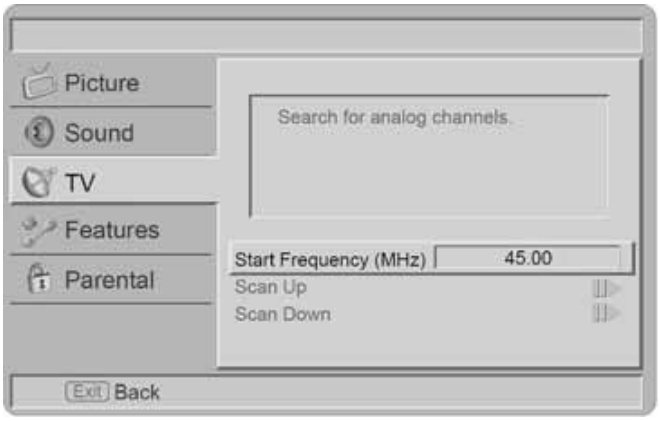

[Channel skip] - To prevent certain programs from being viewed by pressing CH + / - buttons on the remote control, the program position can be skipped.
Tip: The skipped program may not be found by pressing CH + / - buttons but can be access by pressing number buttons directly.
Tip: The skipped program may not be found by pressing CH Λ / V but can be accessed by pressing number buttons directly.
[Channel sort] - Change the order of the Channel List.
[Channel Edit] - Enter the Channel Edit in the channels submenu to edit the channel number and channel name by using the number buttons 0~9.
Note: The following RC number-mapping table will not be shown on the TV screen.

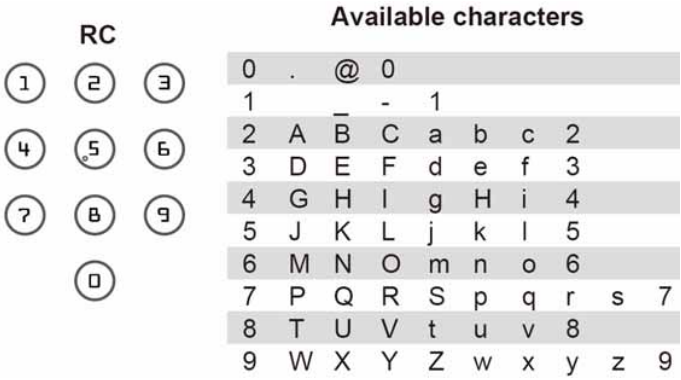

[Decoder (Analog only)] – Channel Decode support the Canal+ (paid television channel); however, the channel also
broadcast some un-encrypted programs.
These programs without encryption can be viewed free of charge.
[Analog CH Fine Tune] - Select Analog CH Fine Tune in the Channels submenu to adjust the frequency.

FEATURES MENU
The Features menu in TV mode shows as below. This menu gives users the most flexibilities to satisfy their generally demands. According to the various requirements in different source modes, certain features should be hidden (disable) on the menu. The details footnotes will be described clearly below.

Downloaded from www.Manualslib.com manuals search engine

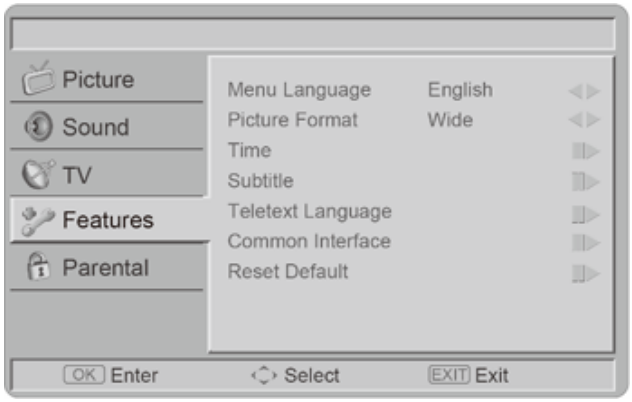

1. **Menu Language:** To select the on-screen display menu language.
2. **Picture Format:** To select the available display format from Auto, Normal, Native (HDMI only), Zoom 1, Zoom2, or Wide.
3. **Time:**

[Time Zone] - To select the time zone you are in.

[Time] - To set the time and date or select auto synchronization.

Tip: Before you want to set the time and date by your own, please make sure Auto synchronization is Off.

[Sleep Timer] - To set the TV to turn itself off within a certain time.

4. **Subtitle:**

[Analog Subtitle] - To display the transmitted subtitle on the screen. Either this text can be permanently displayed (assuming that the service is available in the broadcast) or only when mute is active.

[Digital Subtitle] - Use the Digital Subtitle function when two or more subtitle languages are broadcasted. If subtitle data in a selected language is not broadcasted, the default language subtitle will be displayed.

[Subtitle Type] - To choose the subtitle type from normal or hearing impaired.

5. **Teletext Language:**

[Digital Teletext Language] - To select the teletext language.

[Decode Page Language] - To set the teletext language to the regional location.

6. **Common Interface:** This menu appears with your CI supplier information.
7. **HDMI Scan Info (HDMI only):**

[Automatic] - Set to underscan or overscan automatically when the video signal is detected.

[Underscan] - When the video signal is detected, all active pixels and lines are displayed with or without border.

[Overscan] - When the video signal is detected, some active pixels and lines at the edges are not displayed.

8. **Reset Default:** To reset all TV settings to the original factory values.

PARENTAL MENU

Enable you to control special functions for the TV channels.

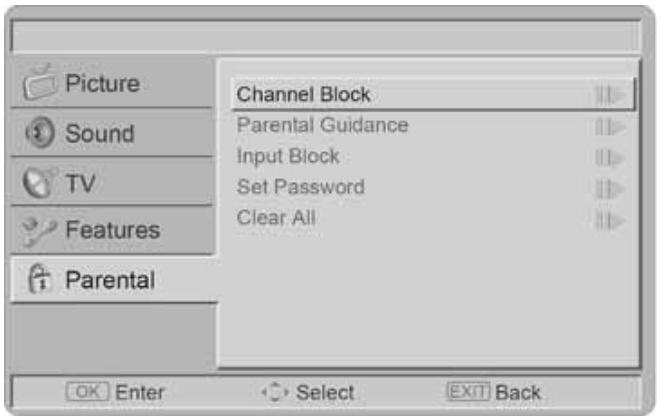

1. **Channel Block:** To block certain TV channels.

Downloaded from www.Manualslib.com manuals search engine

2. **Parental Guidance:** To control access programs based on their age ratings. All settings apply to digital channels. Note: This function operates according to information from the broadcasting station. Therefore if the signal has no information, this function does not operate.
3. **Input Block:** To disable the specific external input signals.
4. **Set Password:** To set or change your password. Please follow the instructions to set it. All number combinations from 0000 to 9999 are valid.
Tip: Remember that 5351 is the default Change Password code. If your access code has been changed or you have forgotten the code, you can always get in by inputting the default code.
5. **Clear All:** To clear all the settings in the parental submenu.

COMMON INTERFACE MODULE

- The Common Interface CI Slot, is designed to accept the Conditional Access CA Module coupled with a Smart card,
in order to view pay TV programmes and additional services. Contact your Common Interface service provider for further information about modules and subscription options. Please note that CA modules and smart cards are not included, or supplied as optional extras by us.

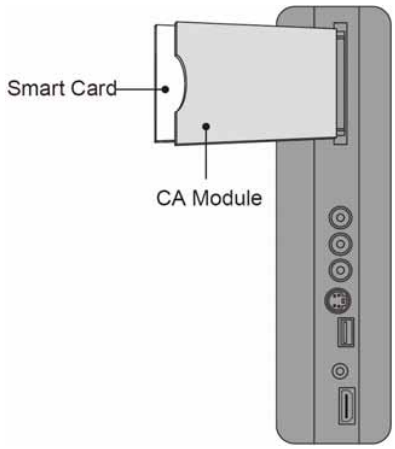

WARNING: Switch off your TV before any module is inserted into the Common Interface slot.
1. Correctly insert the CA Module and then the Smart Card into the CI slot located at the side of the TV.
2. Turn on the TV and press MENU and select the TV submenu. “Common interface” will be displayed if the CA module is detected. Wait for few moments until the card is activated.

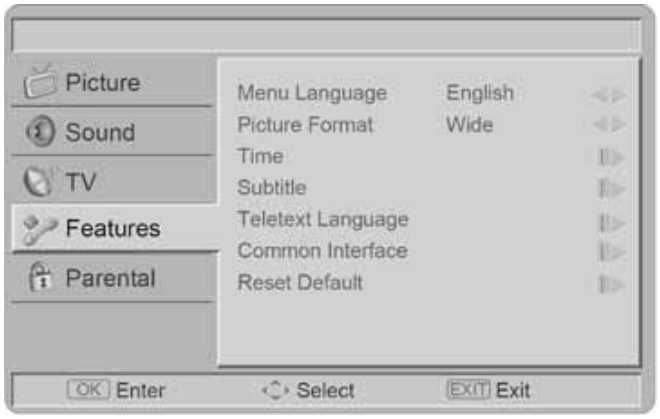

Downloaded from www.Manualslib.com manuals search engine

3. Select Common Interface to view the menu options and information on the inserted CI card.

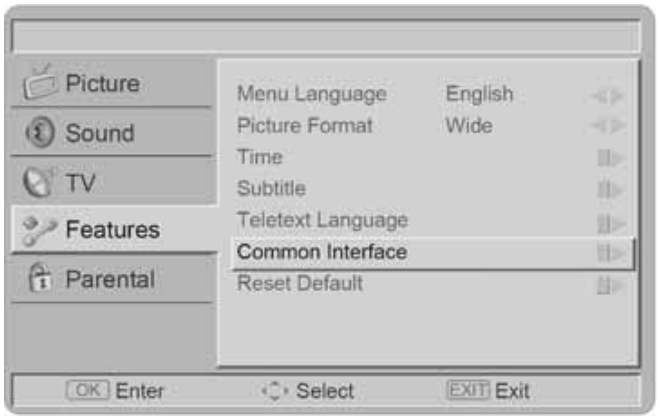

4. Press OK to access the card menu, for more details refer to the module's instruction manual.

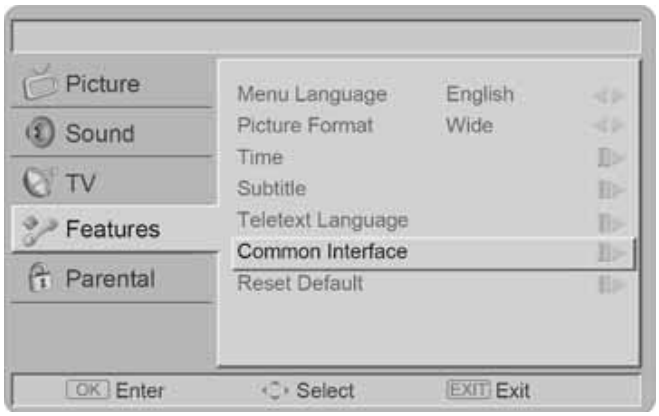

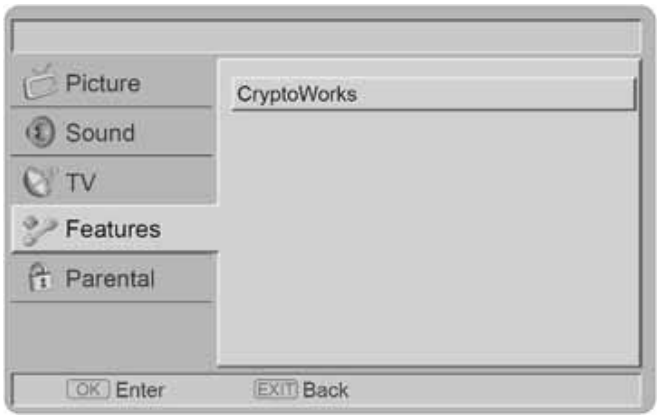

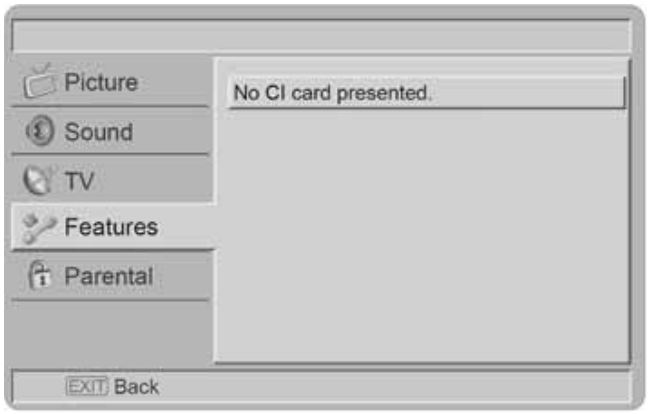

Downloaded from www.Manualslib.com manuals search engine

5. When module is removed, the “Common Interface” menu will disappear from the screen.

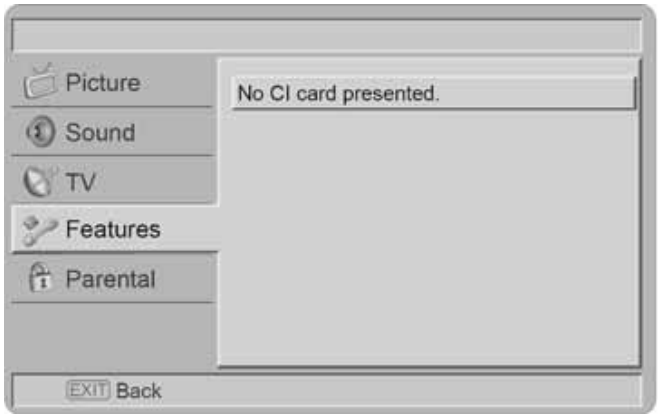

OAD OPERATION

OAD for Software Update function:

1. When you get the updating news from the TV shop’s web, you can update the operation software using the Download
menu. The data for various units are transferred consecutively on a special receiving channel.

2. You need to search the channel with updating code stream. (Note: you can get information from the TV shop or internet.)

Operation

1. When you search the channel. You will get a information.

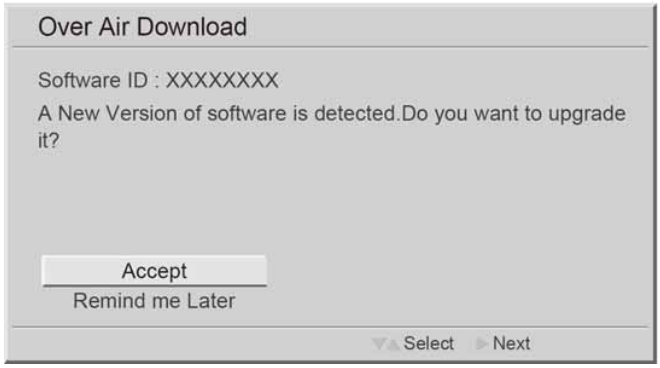

2. Press ▲ ▼ to confirm if you would like to “Accept” this new software or “Reject“ and use ► button to action update new software.

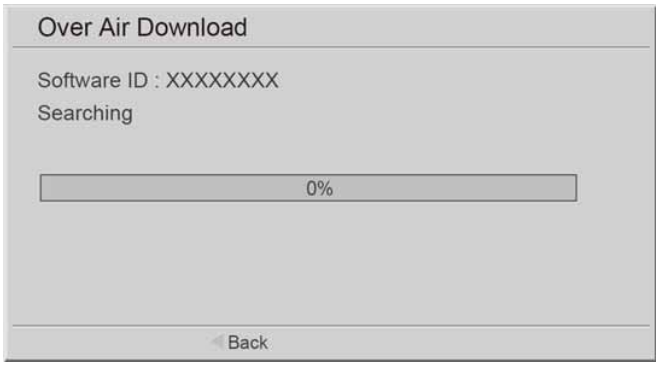

Downloaded from www.Manualslib.com manuals search engine

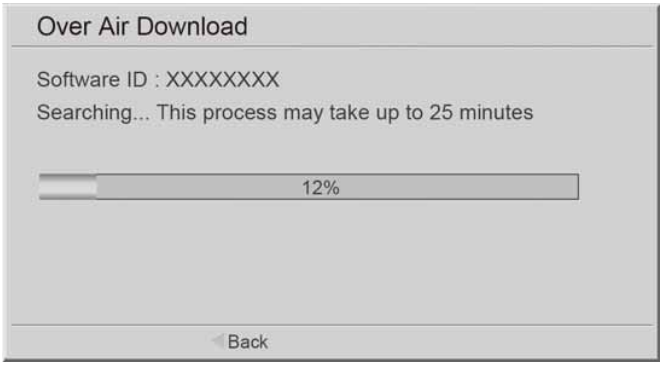

3. After the programming, please use to confirm if you would like to restart the TV. The software will be updated completely after restart the TV.

NOTE: You must not switch off the unit during this process!

Downloaded from www.Manualslib.com manuals search engine

2.3 How to Connect

Coaxial (RF)

Using Your Antenna or Digital Cable for DTV.

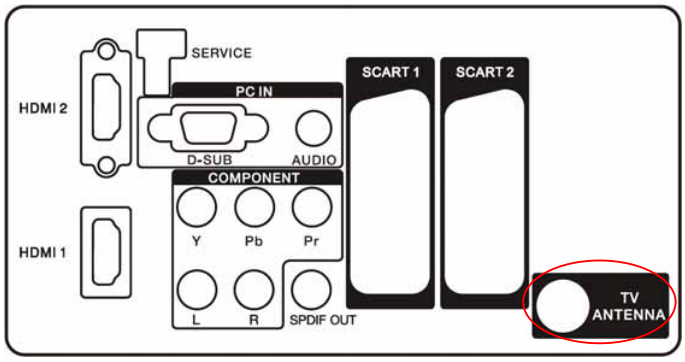

1. Turn off the HDTV.
2. Connect the coaxial (RF) connector from your antenna or digital cable (out-of-thewall, not from the Cable Box) to the TV ANTENNA connector.
3. Turn on the HDTV.
4. Select ATV/DTV using the SOURCE button on the remote control or the control key on the side of the TV.

Using Your Antenna or Cable for DTV.

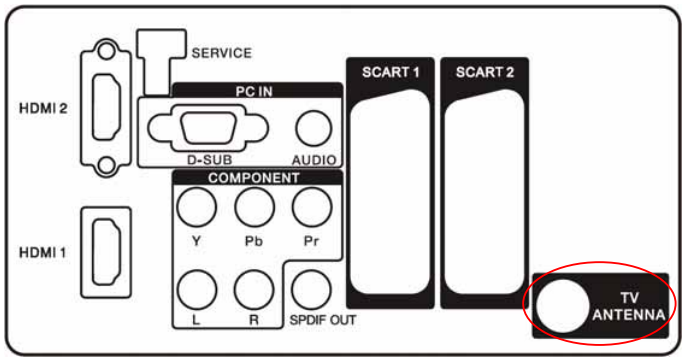

1. Turn off the HDTV.
2. Connect the coaxial (RF) connector from your antenna or cable (out-of-the-wall, not from the Cable Box) to the TV ANTENNA connector at the rear of the HDTV
3. Turn on the HDTV.
4. Select ATV/DTV using the SOURCE button on the remote control or the control key on the side of the TV.

Using the Antenna or Cable for your VCR

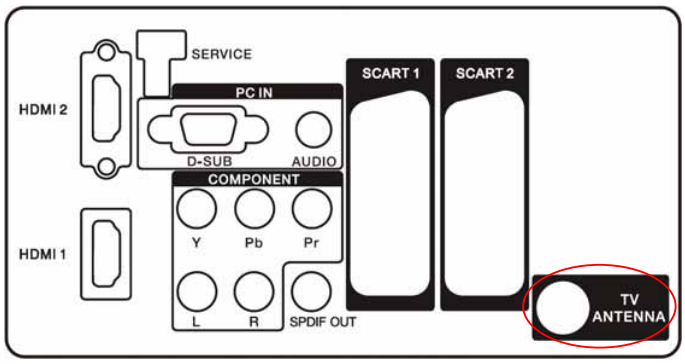

1. Turn off the HDTV and VCR.
2. Connect the “Output to TV”, “RF Out” or “Antenna Out” connector on the rear of your VCR to the TV ANTENNA

Downloaded from www.Manualslib.com manuals search engine

connector at the rear of the HDTV.
3. Turn on the HDTV and VCR.
4. Select ATV/DTV using the SOURCE button on the remote control or the control key on the side of the TV.
NOTE: If you have an off-air antenna or cable TV, connect it to the “Antenna In” connector on the rear of your VCR.

Connecting Your HDTV Set-Top Box
Using HDMI (19”/22” only have one HDMI)
HDTV Set-Top Boxes that have a HDMI digital interface should be connected to the HDMI input of the LCD HDTV for optimal results.

Connecting your HDTV Set-Top Box (Best)

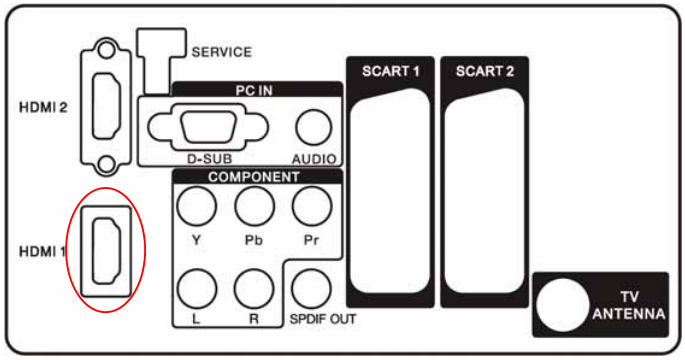

1. Turn off the HDTV and HDTV Set-Top Box.
2. Connect a HDMI cable to the HDMI output of your HDTV Set-Top Box and the other end to the HDMI Input at the rear of the HDTV.
3. Turn on the HDTV and HDTV Set-Top Box.
4. Select HDMI using the SOURCE button on the remote, side of the HDTV, or directly by pressing the HDMI button on the Remote Control.
NOTE: The HDMI input on the HDTV supports High-bandwidth Digital Content Protection (HDCP). HDCP encrypts the transmission between the video source and the digital display for added security and protection.
Refer to your HDTV Set-Top Box user manual for more information about the video output requirements of the product or consult your cable or satellite operator.

For HDTV Set-Top Boxes with DVI
1. Turn off the HDTV and HDTV Set-Top Box.
2. Using a HDMI-DVI cable, connect the DVI end to your HDTV Set-Top Box and the HDMI end to the HDMI Input at the rear of the HDTV.
3. Turn on the HDTV and HDTV Set-Top Box.
4. Select HDMI using the SOURCE button on the remote, side of the HDTV, or directly by pressing the HDMI button on the Remote Control.
NOTE: The HDMI input on the HDTV supports High-bandwidth Digital Content Protection (HDCP). HDCP encrypts the transmission between the video source and the digital display for added security and protection.
Refer to your HDTV Set-Top Box user manual for more information about the video output requirements of the product
or consult your cable or satellite operator.
The DVI to HDMI connection provides video only. Connection to an alternate audio player is required for audio.

Downloaded from www.Manualslib.com manuals search engine

Using Component Video

Connecting your HDTV Set-Top Box (Better):

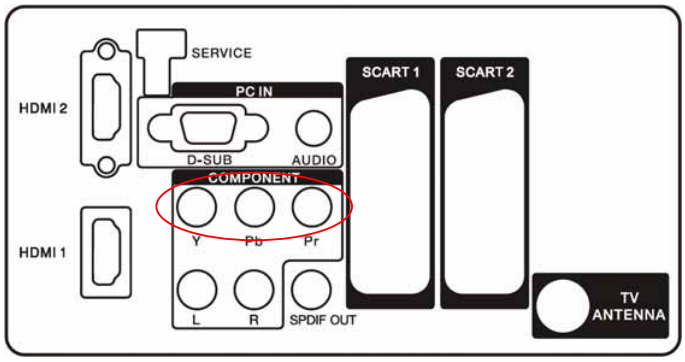

1. Turn off the HDTV and HDTV Set-Top Box.
2. Connect the Pr (red colour) connector on your HDTV Set-Top Box to the corresponding Pr (red colour) connector in the Component group.
3. Connect the Pb (blue colour) connector on your HDTV Set-Top Box to the corresponding Pb (blue colour) connector
in the Component group.
4. Connect the Y (green colour) connector on your HDTV Set-Top Box to the corresponding Y (green colour) connector
in the Component group.
5. Using an audio cable (red and white connectors), connect the cable to the audio output connectors associated with
the Component output on your HDTV Set-Top Box and connect the other end to the audio connectors associated with the Component.
6. Turn on the HDTV and HDTV Set-Top Box.
7. Select YPbPr using the SOURCE button on the remote, side of the HDTV or directly by pressing the YPbPr button on the Remote Control.

NOTE: Refer to your HDTV Set-Top Box user manual for more information about the video output requirements of the product or consult your cable or satellite operator.

Connecting Your Basic Set-Top Box

Using Composite Video

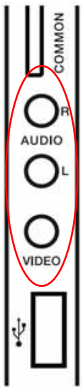

1. Turn off the HDTV and Set-Top Box.
2. Using an AV Cable, connect the Video (yellow colour) connector on your Set-Top Box to the corresponding Video (yellow colour) connector in the AV group at the side of the HDTV.
3. Using the red and white connectors, connect the cable to the audio output connectors associated with the Video output on your Set-Top Box and connect the other end to the audio connectors associated with the AV input at the side of the HDTV.

Downloaded from www.Manualslib.com manuals search engine

4. Turn on the HDTV and Set-Top Box.
5. Select AV using the SOURCE button on the remote, side of the HDTV or directly by pressing the VIDEO button on the Remote Control.

Downloaded from www.Manualslib.com manuals search engine

Using Coax (RF)

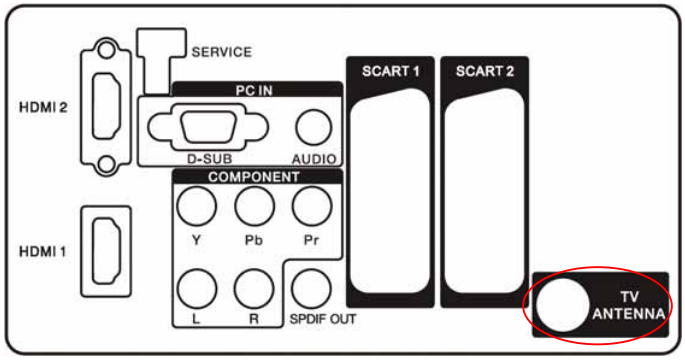

1. Turn off the HDTV and Set-Top Box.
2. Using a Coax (RF) cable, connect one end to the TV OUT (RF) on your Set Top Box and the other end to the TV input at the rear of the HDTV.
3. Turn on the HDTV and Set-Top Box.
4. Select ATV/DTV using the SOURCE button on the remote control or the control key on the side of the TV.

NOTE: Refer to your Set Top Box user manual for more information about selecting the video or RF output of the product.

Connecting Your DVD Player

Using HDMI

DVD players that have a digital interface such as HDMI (High Definition Multimedia Interface) should be connected to the HDMI input of the LCD HDTV for optimal results.

Connecting your DVD Player (Best)

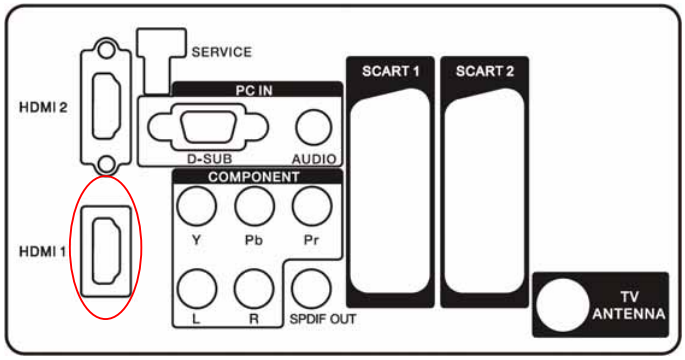

1. Turn off the HDTV and DVD player.
2. Connect a HDMI cable to the HDMI output of your DVD player and the other end to the HDMI Input at the rear of the HDTV.
3. Turn on the HDTV and DVD player.
4. Select HDMI using the SOURCE button on the remote, side of the HDTV or directly by pressing the HDMI button on the Remote Control.

For DVD Players with DVI:

1. Turn off the HDTV and DVD player.
2. Using a HDMI-DVI cable, connect the DVI end to your DVD player and the HDMI end to the HDMI Input at the rear of the HDTV.
3. Turn on the HDTV and your DVD player.
4. Select HDMI using the SOURCE button on the remote, side of the HDTV, or directly by pressing the HDMI button on the Remote Control.

NOTE: Refer to your DVD player user manual for more information about the video output requirements of the

Downloaded from www.Manualslib.com manuals search engine

product.
The DVI to HDMI connection provides video only. Connection to an alternate audio player is required for audio output.

Using Component Video

Connecting your DVD Player (Better)

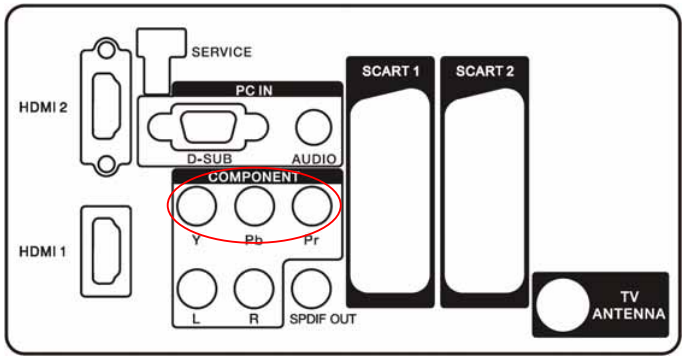

1. Turn off the HDTV and DVD player.
2. Connect the Pr (red colour) connector on your DVD player to the corresponding Pr (red colour) connector in the Component at the rear of the HDTV.
3. Connect the Pb (blue colour) connector on your DVD player to the corresponding Pb (blue colour) connector in the Component group at the rear of the HDTV.
4. Connect the Y (green colour) connector on your DVD player to the corresponding Y (green colour) connector in the Component group at the rear of the HDTV.
5. Using an audio cable (red and white connectors), connect the cable to the audio output connectors associated with
the Component output on your DVD player and connect the other end to the audio connectors associated with the Component input at the rear of the HDTV.
6. Turn on the HDTV and DVD player.
7. Select YPbPr using the SOURCE button on the remote, side of the HDTV or directly by pressing the YPbPr button on the Remote Control.

NOTE: Refer to your DVD player user manual for more information about the video output requirements of the product.

Using SCART

Connecting your DVD Player (Good):

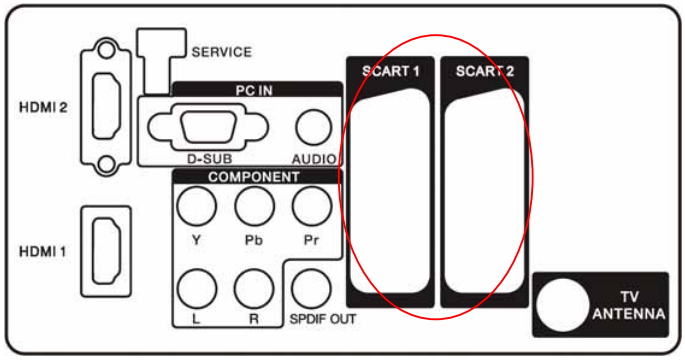

1. Turn off the HDTV and DVD player.
2. Connect the SCART socket of your DVD player to the SCART socket of the HDTV.
3. Turn on the HDTV and DVD player.
4. Select AV using the SOURCE button on the remote, side of the HDTV, or directly by pressing the VIDEO button on the Remote Control.

Downloaded from www.Manualslib.com manuals search engine

Using Composite (AV) Video

Connecting your DVD Player (Good)

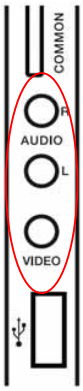

1. Turn off the HDTV and DVD player.
2. Connect the Video (yellow colour) connector on your DVD player to the Video (yellow colour) connector in the AV group.
3. Connect the R (red colour) and L (white colour) audio connectors on your DVD player to the corresponding R (red colour) and L (white colour) audio input connectors in the AV group.
4. Turn on the HDTV and DVD Player.
5. Select AV using the SOURCE button on the remote, side of the HDTV or directly by pressing the VIDEO button on the Remote Control.

Using SCART

Connecting Your VCR or Video Camera

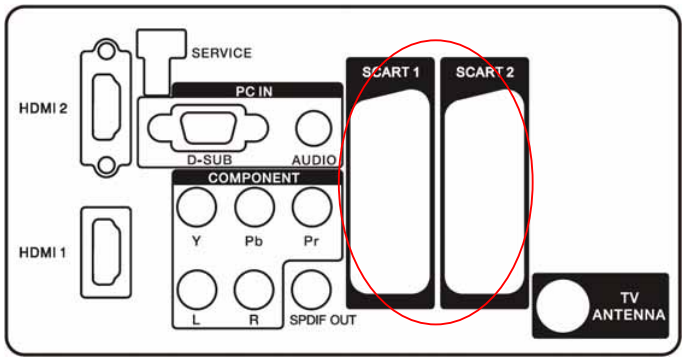

1. Turn off the HDTV and VCR or Video Camera.
2. Connect the SCART socket of your VCR or Video Camera to the SCART socket of the HDTV.
3. Turn on the HDTV and VCR or Video Camera.
4. Select AV using the SOURCE button on the remote, side of the HDTV or directly by pressing the VIDEO button on the Remote Control.

NOTE: Refer to your VCR or Video Camera user manual for more information about the video output requirements of the product.

Downloaded from www.Manualslib.com manuals search engine

Connecting to a PC

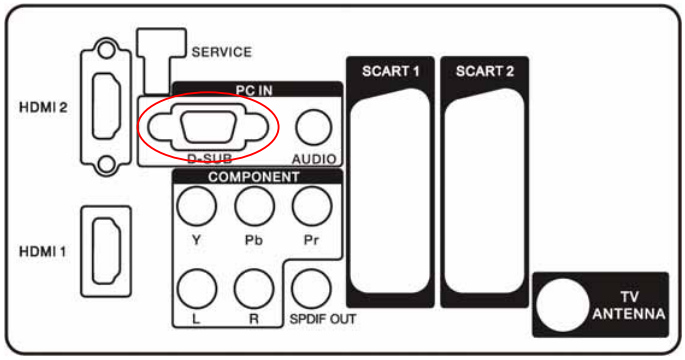

1. Turn off the HDTV and PC.
2. Connect a 15-pin D-Sub RGB (VGA) cable to the RGB output of your PC and the other end to the VGA input at the rear of the HDTV.
3. Connect the Audio Out on your computer to the AUDIO input at the rear of the HDTV.
4. Turn on the HDTV and PC.
5. Select VGA using the SOURCE button on the remote, side of the HDTV or directly by pressing the PC button on the Remote.

NOTE: For the best picture quality when connecting a computer through VGA, set your computer timing mode to native
resolution of panel. Please refer to the PC or graphic card's user guide for additional information on how to set the timing mode and the video output requirements of the product.

Downloaded from www.Manualslib.com manuals search engine

2.4 Front Panel Control Knobs

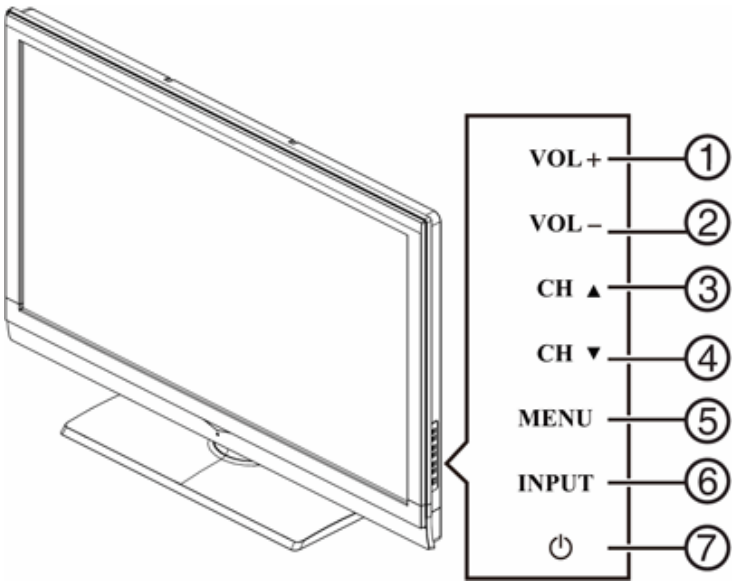

1.	VOL +	**VOL +**: Press to increase the sound volume level.
2.	VOL -	**VOL -**: Press to decrease the sound volume level.
3.	CH ▲	**CH ▲**: Press to select the next higher Programme number.
4.	CH ▼	**CH ▼**: Press to select the next lower Programme number.
5.	MENU	**Menu key**: Press to open or exit the OSD (on-screen display) menu.
6.	INPUT	**Input key**: Press to select the input source.
7.	⏻POWER	**Power key**: Press to turn on / off (standby) the TV set. (Press to turn on TV after the power on status, LED had changed to the Blue colour and stopped flashing.)

Downloaded from www.Manualslib.com manuals search engine

Peripheral Connection Guide

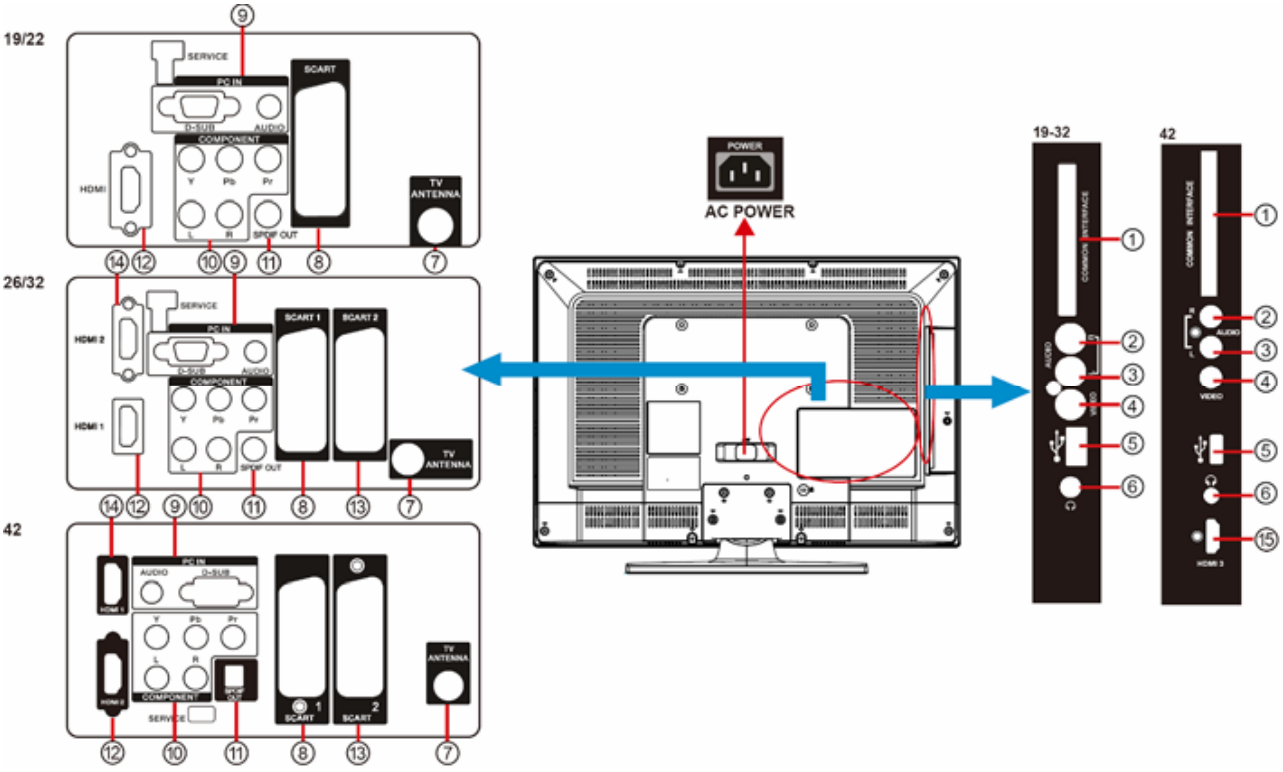

① **COMMON INTERFACE (CI)** – Conditional Access Module (CAM) use only. Please contact your service provider for details.
②, ③, ④ **AV IN** – Connect the primary source for composite video devices, such as a VCR or video game. Use the white and red connectors to connect the external audio from the same source.
⑤ **USB** – Support multimedia input for .MP3 and .JPEG file.
⑥ **Earphone Output** – Connect to the headphones. When the headphone is inserted to the plug, all the speakers will be muted.
⑦ **TV ANTENNA** – Connect to an antenna or digital cable (out-of-the-wall, not from Cable Box) for Digital TV.
⑧, ⑬ **SCART** – Connect the video recorder or decoder to the television. Full SCART transmits RGB, CVBS video in/out, and audio in/ out; HALF SCART transmits S-Video, CVBS video in/out, and audio in/ out.
Note 1: 19”/22” model only has one SCART port.
Note 2: SCART1/2 has monitor out. (CVBS/YPbPr/ATV/DTV)
⑨ **PC IN** – Connect the video and audio cables from a computer here.
⑩ **COMPONENT (Y/Pb/Pr with Audio L/R)** – Connect the primary source for component video devices such as a DVD Player or set top box here.
⑪ **SPDIF (Digital Audio Out)** – When a digital audio signal is associated with the input selected for viewing, the digital audio will be available on this SPDIF connection to your home theatre system.
⑫, ⑭, ⑮ **HDMI** – Connect the primary source for digital video such as a DVD multimedia player or set top box through this all digital connector.
Note: 19”/22” model only has one HDMI port.

Downloaded from www.Manualslib.com manuals search engine

3. Input/Output Specification

3.1 RGB Signal Input

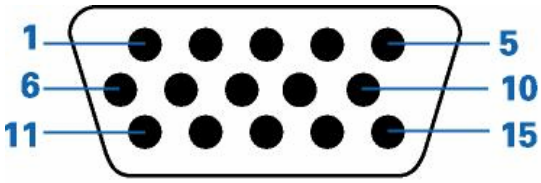

Pin No.	Description	Pin No.	Description
1	Red	9	+5V (Supply From PC)
2	Green	10	Sync GND
3	Blue	11	GND
4	GND	12	Bi-Directional Data(SDA)
5	Self Test	13	H. Sync
6	Red Ground	14	V. Sync
7	Green Ground	15	Data Clock(SCL)
8	Blue Ground		

3.2 HDMI Digital Connector

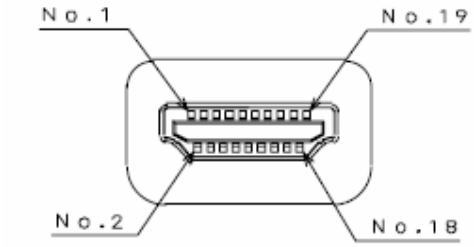

Pin No.	Description	Pin No.	Description
1	TMDS Data2+	11	TMDS Clock Shield
2	TMDS Data2 shield	12	TMDS Clock-
3	TDMS Data2-	13	CEC
4	TMDS Data1+	14	Reserved (N.C. on device)
5	TMDS Data1 shield	15	SCL
6	TMDS Data1-	16	SDA
7	TMDS Data0+	17	DDC/CEC Ground
8	TMDS Data0 shield	18	+5V Power
9	TMDS Data0-	19	Hot Plug Detect
10	TMDS Clock+		

Downloaded from www.Manualslib.com manuals search engine

3.3 Full Scart Connector

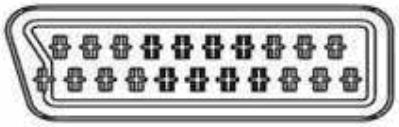

Pin No.	Description	Pin No.	Description
1	Audio Output Right	12	N.C.
2	Audio Input Right	13	GND(Red)
3	Audio Output Left	14	GND(Blanking)
4	GND(Audio)	15	Red Input
5	GND(Blue)	16	RGB Switching Control
6	Audio Input Left	17	GND(Video Input & Output)
7	Blue Input	18	GND(RGB Switching Control)
8	Switch Signal Input (Fast Blanking)	19	Video Output(Composite)
9	GND(Green)	20	Video Input(Composite)
10	N.C.	21	Common Ground
11	Green Input		

3.4 Half Scart Connector

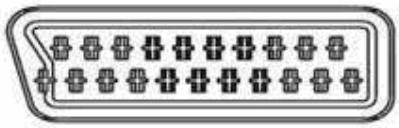

Pin No.	Description	Pin No.	Description
1	Audio Output Right	12	N.C.
2	Audio Input Right	13	GND
3	Audio Output Left	14	GND
4	GND(Audio)	15	Chrominance Input
5	GND(blue)	16	N.C.
6	Audio Input Left	17	GND
7	N.C.	18	GND
8	Function Select	19	Video Output(Composite)
9	GND	20	Video Input(Composite)
10	N.C.	21	Common Ground
11	N.C.		

Downloaded from www.Manualslib.com manuals search engine

3.5 Signal Type

- TV RF input system - Aerial or cable should support PAL/SECAM/DVB-T
- TV RF input level - 10mV (80dBuV) typical, 30dBuV ~ 100dBuV receiving capability, terminated with input impedance of 75Ω.
- CVBS input - 1000mVpp (including 300 mV sync level), terminated with input impedance of 75Ω.
- S-Video input - Y: 1000mVpp (include sync), C: 300mVpp terminated with Input Impedance of 75Ω.
- Component video input - Y: 1000mVpp (include sync), PbPr: 700mVpp terminated With Input impedance of 75Ω. Support 480i/p, 576i/p, 720p, 1080i at 50Hz or 60Hz refresh rate.
- Audio input - Sensitivity 500mV (rms). For rated power, the amplifier should be able to handle input signal up to 2.0V, input impedance >10KΩ.
- SCART input / output - Full SCART, includes RGB in, CVBS (audio L/R) in/ (TV out). Half SCART includes S-Video in, CVBS (audio L/R) in/ (TV out).
- HDMI (High Definition Multimedia Interface)- Support 480i /480p, 576i/576p, 720p, 1080i format with HDCP Digital interface with 4 channels TMDS signal
- CI Slot - PCMCIA card 5V input.
- PC VGA input - 700 mV input level, TTL level sync, RGB in 75Ω impedance.
- PC Audio input - 500 mVrms input level, impedance > 10 kΩ.
- Headphone output - 4 mW (Typ.) at 32Ω, impedance between 8 - 600Ω.
- SPDIF output - Level: 0.5V+/-0.1V at 75Ω Square Wave. SPDIF output sync SCART audio out.
- Amplifier output - 5W+/-10%
- Speaker - 8Ω

Downloaded from www.Manualslib.com manuals search engine

3.6 VGA Support Format

Item	H.Freq.(KHz)	Mode	Resolution	V.Freq.(KHz)	19"~32"
1	31.469	IBM VGA	640x350	70.086	
2	31.469	IBM VGA	720x400	70.087	●
3	31.469	IBM VGA	640x480	59.94	●
4	35	MACINTOSH	640x480	67	
5	37.861	VESA	640x480	72.809	
6	37.5	VESA	640x480	75	
7	35.156	VESA	800x600	56.25	
8	37.879	VESA	800x600	60.317	●
9	48.077	VESA	800x600	72.188	
10	46.875	VESA	800x600	75	
11	49.7	MACINTOSH	832x624	75	
12	48.363	VESA	1024x768	60.004	●
13	56.476	VESA	1024x768	70.069	
14	60.023	VESA	1024x768	75.029	
15	61.08	IBM XGA-2	1024x768	75.781	
16	44.772	VESA CVT	1280x720	59.855	
17	47.776	VESA	1280x768	59.87	
18	60.289	VESA	1280x768	75	
	49.702	VESA	1280x800	59.81	
19	47.72	VESA CVT	1360x768	59.799	●
20	63.981	VESA	1280x1024	60.02	
21	79.976	VESA	1280x1024	75.025	
	55.935	VESA	1440x900	59.887	
	70.635	VESA	1440x900	74.984	
22	65.29	CVT1.76MW	1680x1050	59.954	
23	64.674	CVT1.76MW-R	1680x1050	59.883	
24	66.587	CVT2.3MA-R	1920x1080	60	

Downloaded from www.Manualslib.com manuals search engine

4. Mechanical Instructions

1. Remove the 4 screws to remove stand.

2. Remove the 13 screws to remove rear cover.

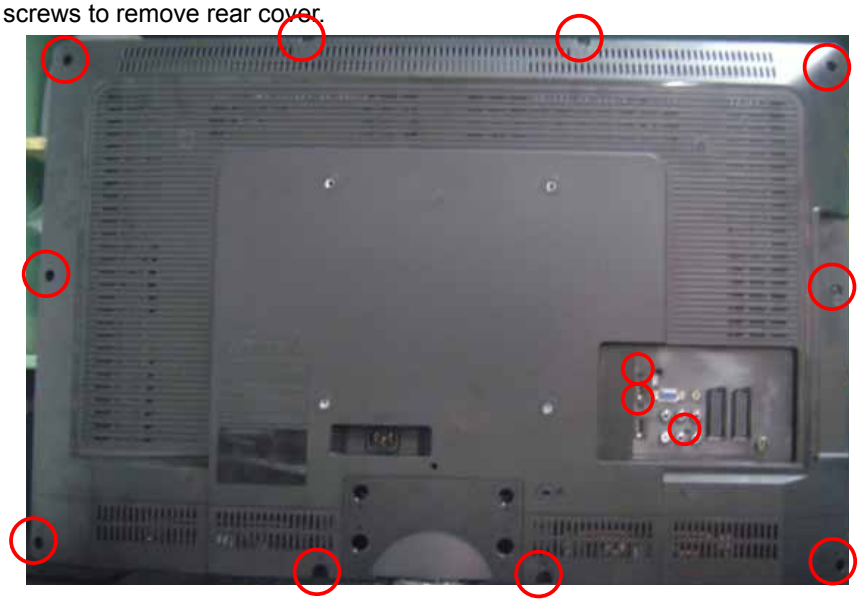

3. Release the connectors.

Downloaded from www.Manualslib.com manuals search engine

4. Remove the 15 screws to remove main/power board and shield-IO.

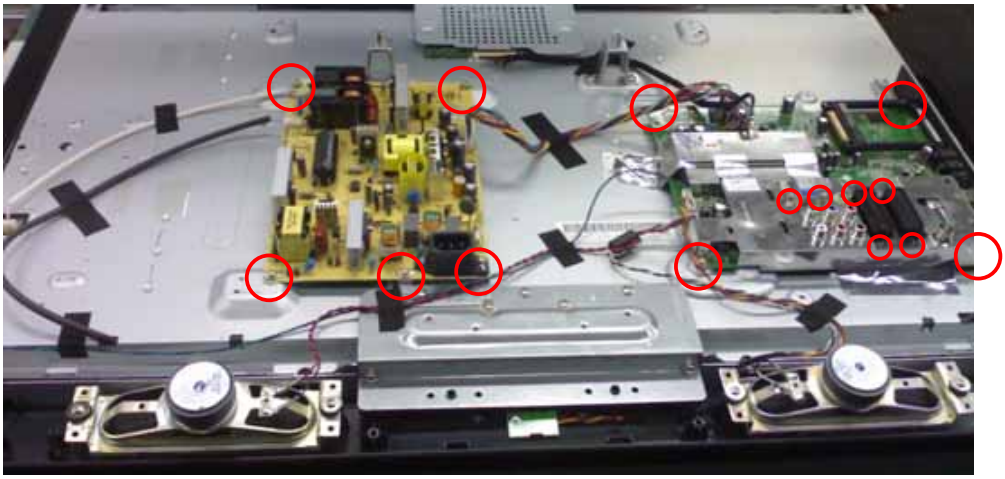

5. Remove the 18 screws to remove IR/key board and BKT and separate the panel and bezel.

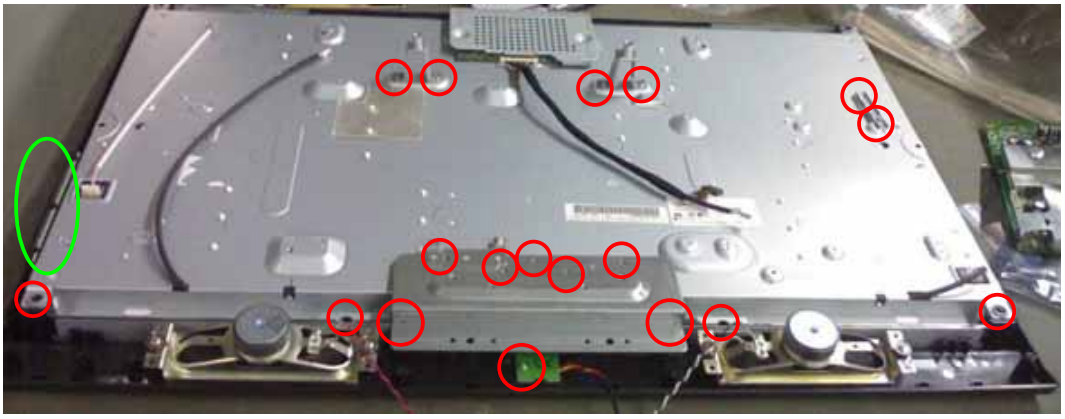

6. Remove the 4 screws to remove speakers.

Downloaded from www.Manualslib.com manuals search engine

5. Repair Flow Chart

No Picture (LED Orange)

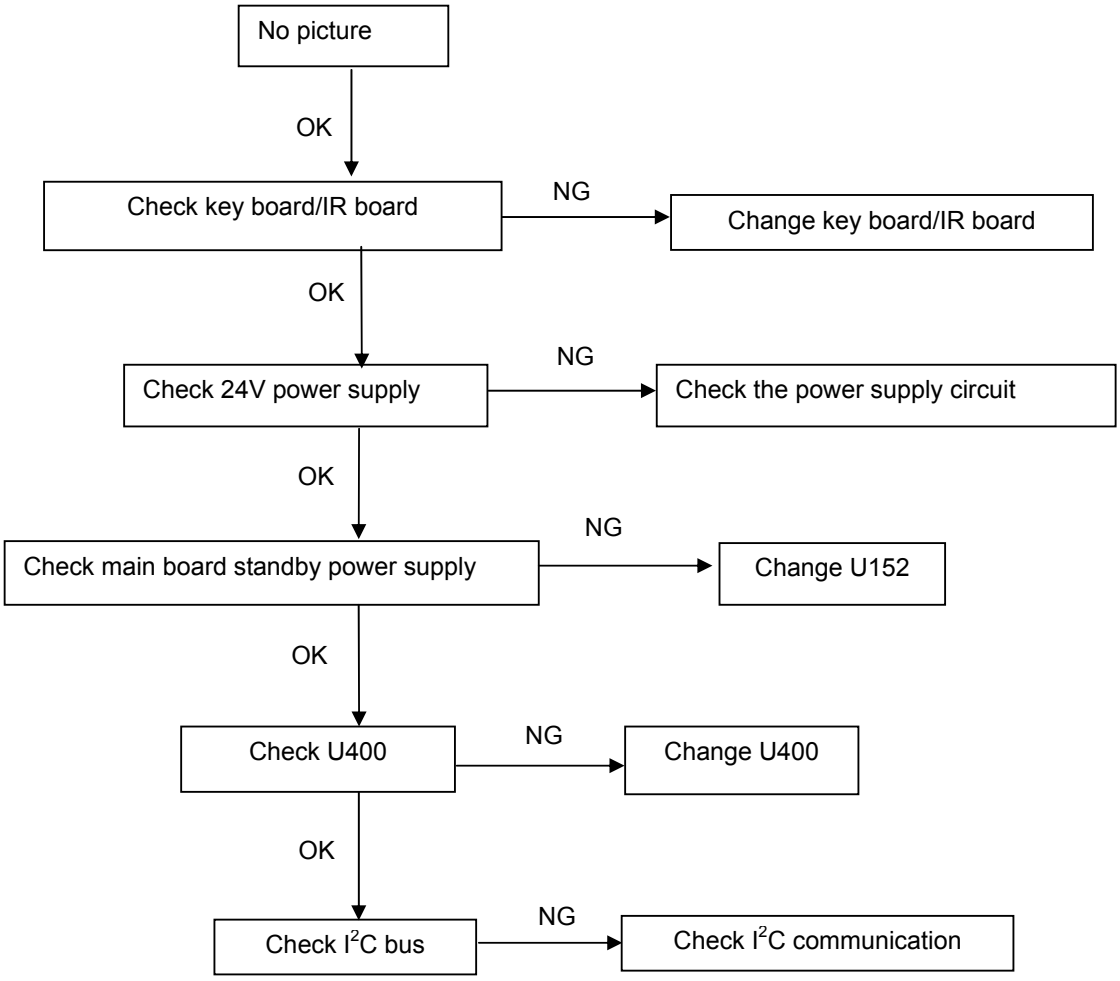

Downloaded from www.Manualslib.com manuals search engine

Abnormal Display

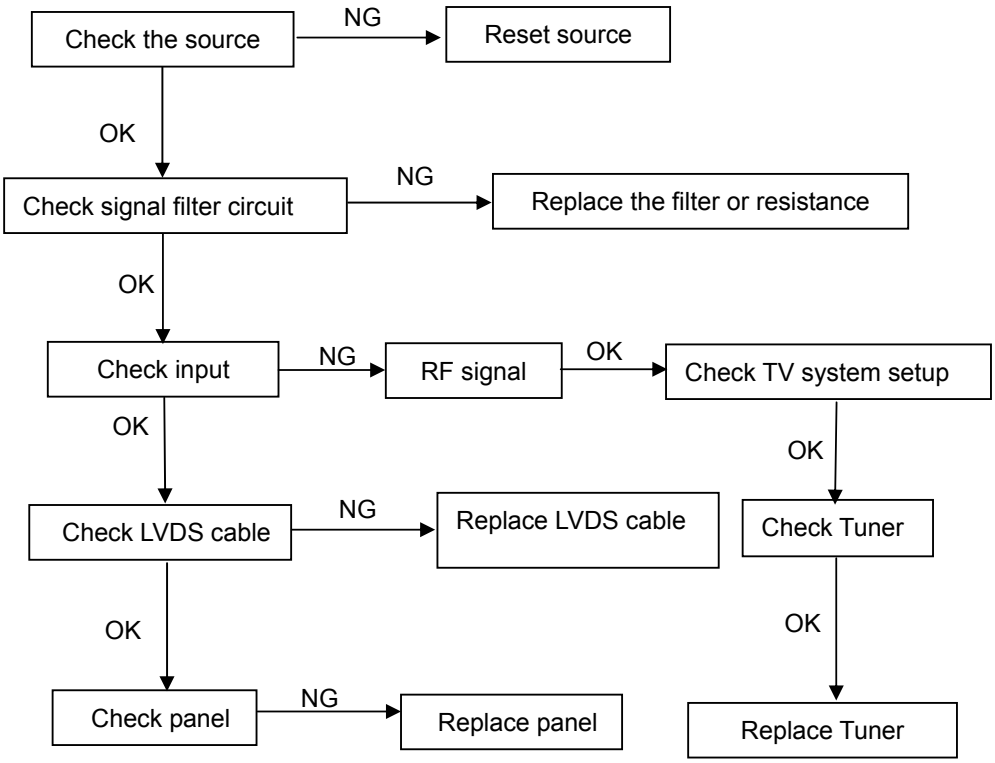

No Sound

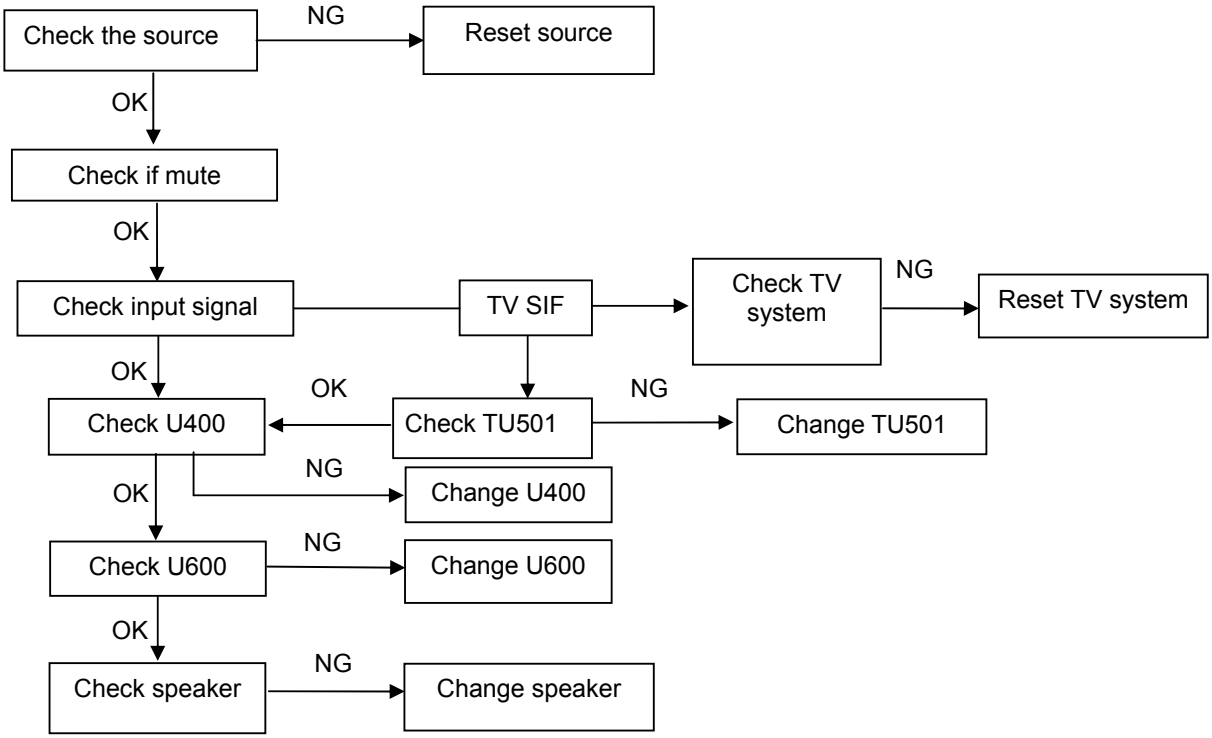

Downloaded from www.Manualslib.com manuals search engine

No Power (No LED Indicator)

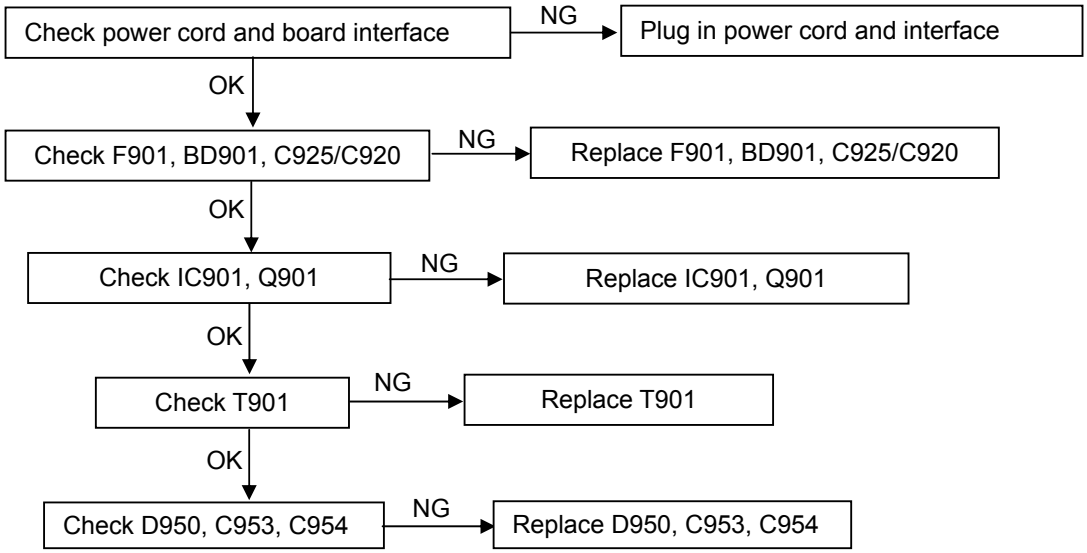

No Display (LED Indicator Green)

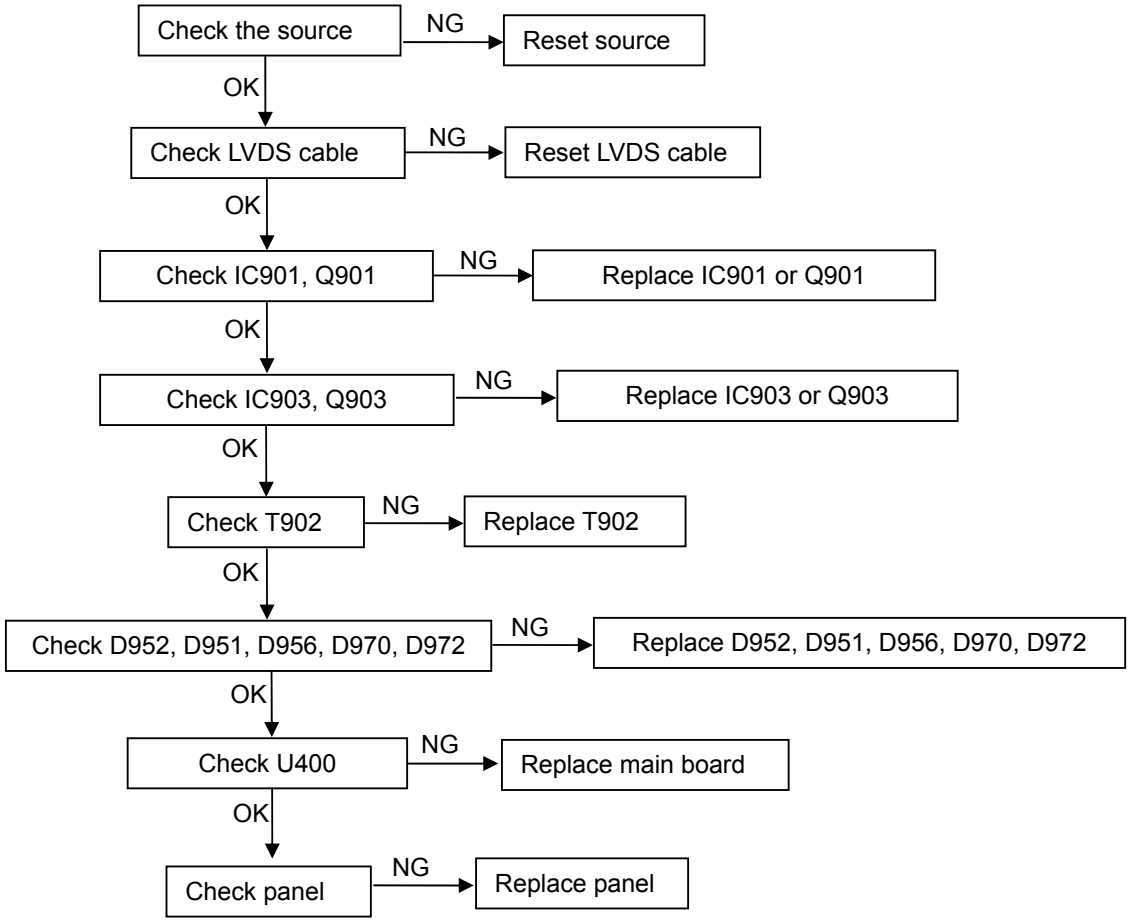

Downloaded from www.Manualslib.com manuals search engine

Key Board

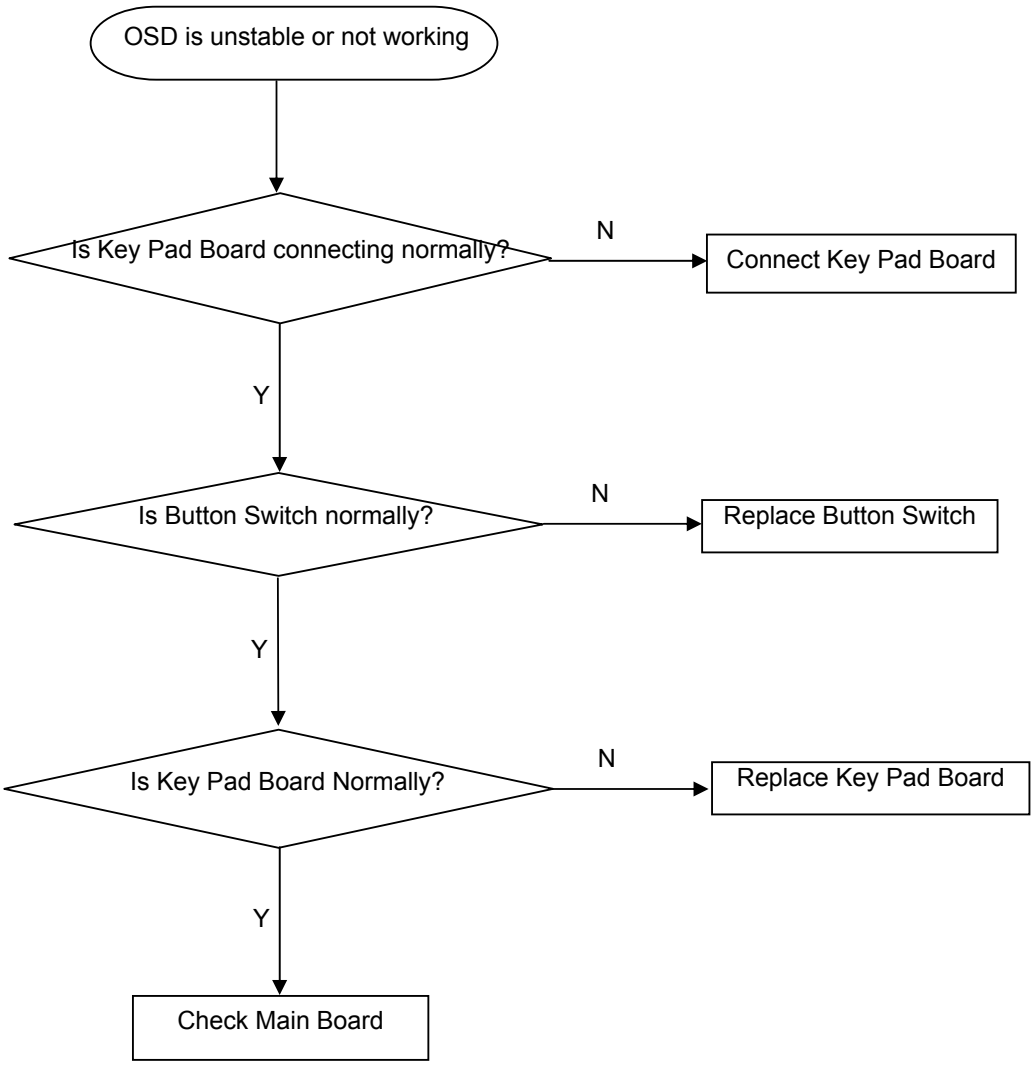

Downloaded from www.Manualslib.com manuals search engine

6. PCB Layout

6.1 Main Board

LT26A1 715G3693M01000004K

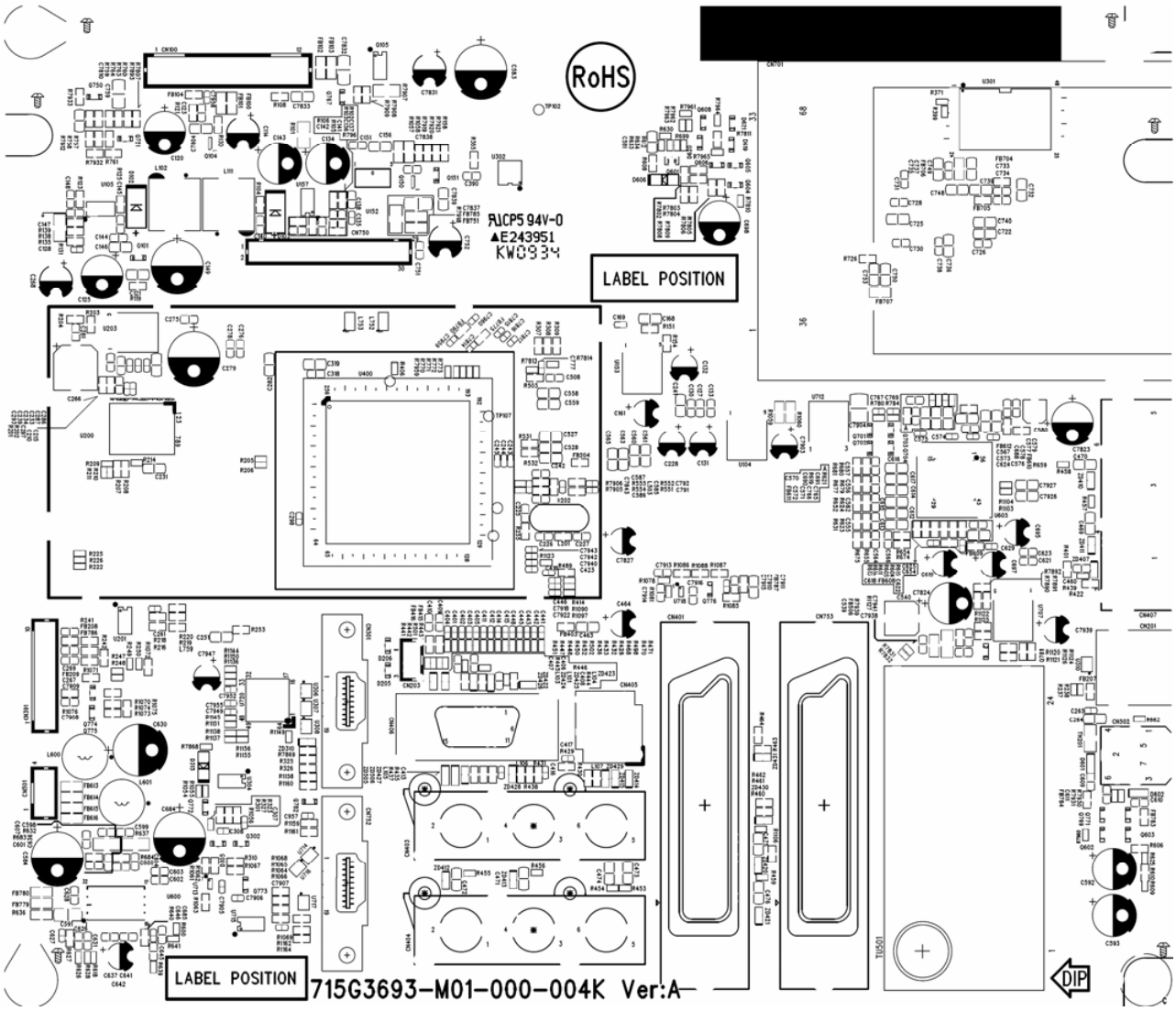

Downloaded from www.Manualslib.com manuals search engine

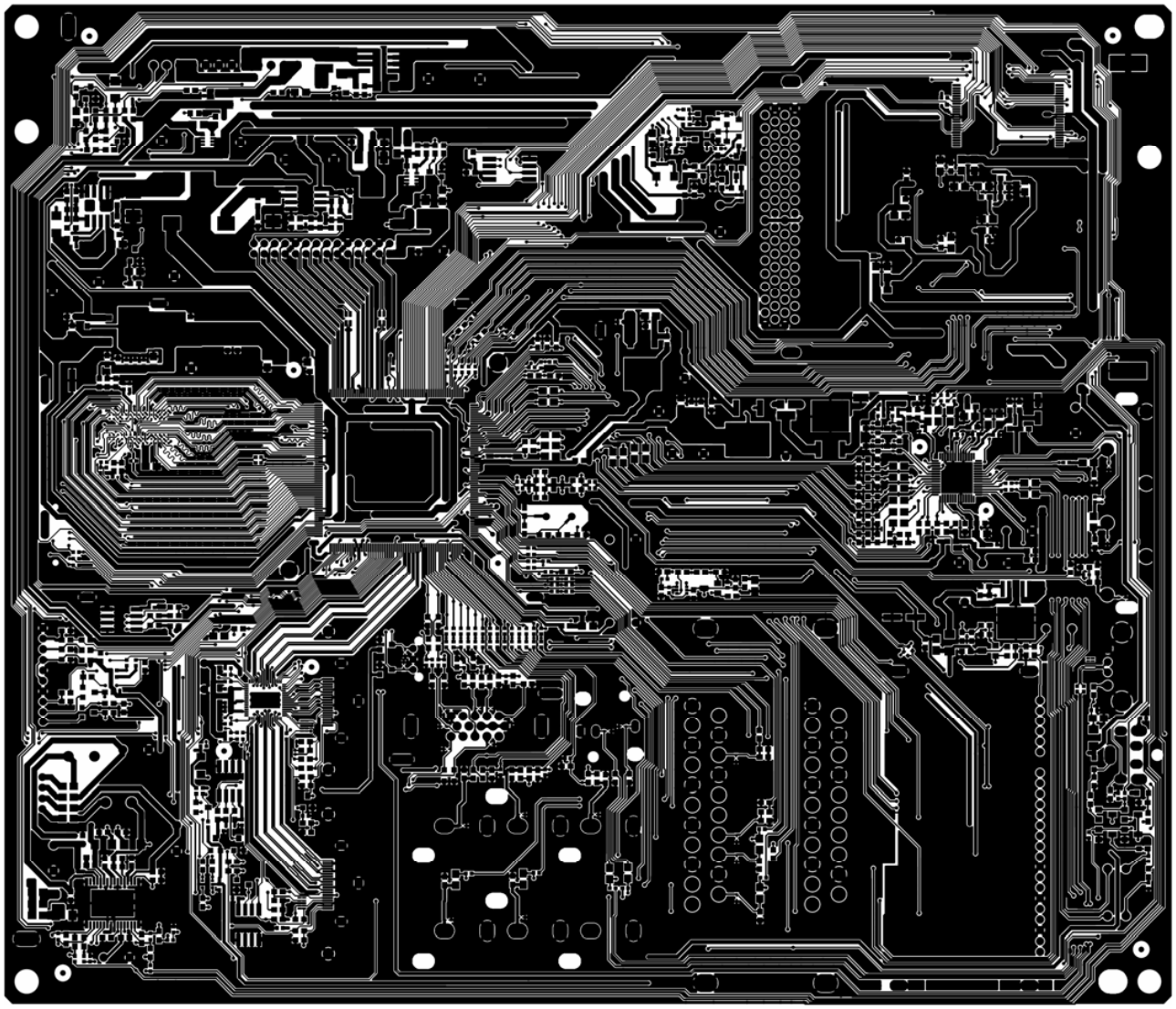

Downloaded from www.Manualslib.com manuals search engine

LT32A1 715G3693M01001004K

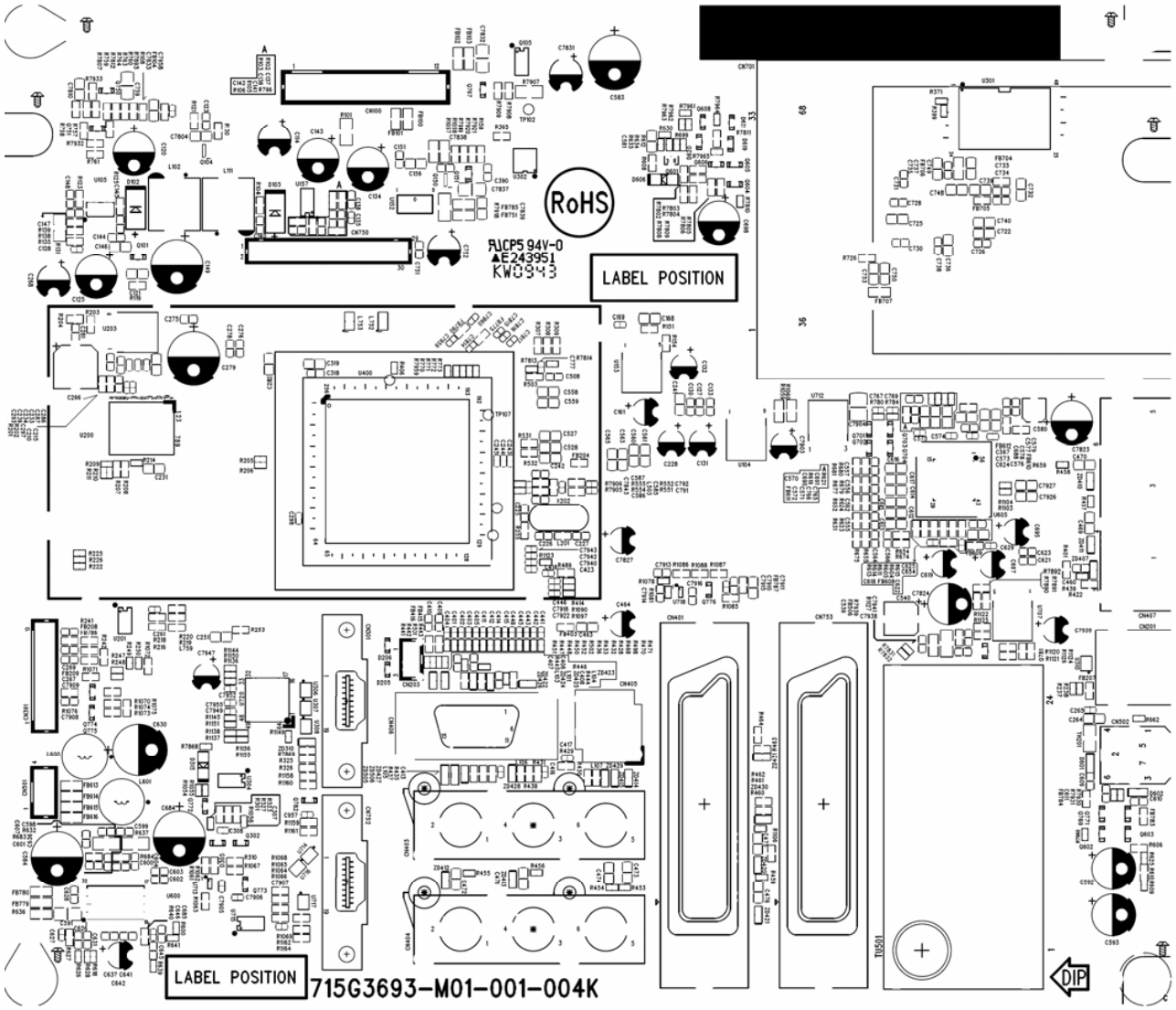

Downloaded from www.Manualslib.com manuals search engine

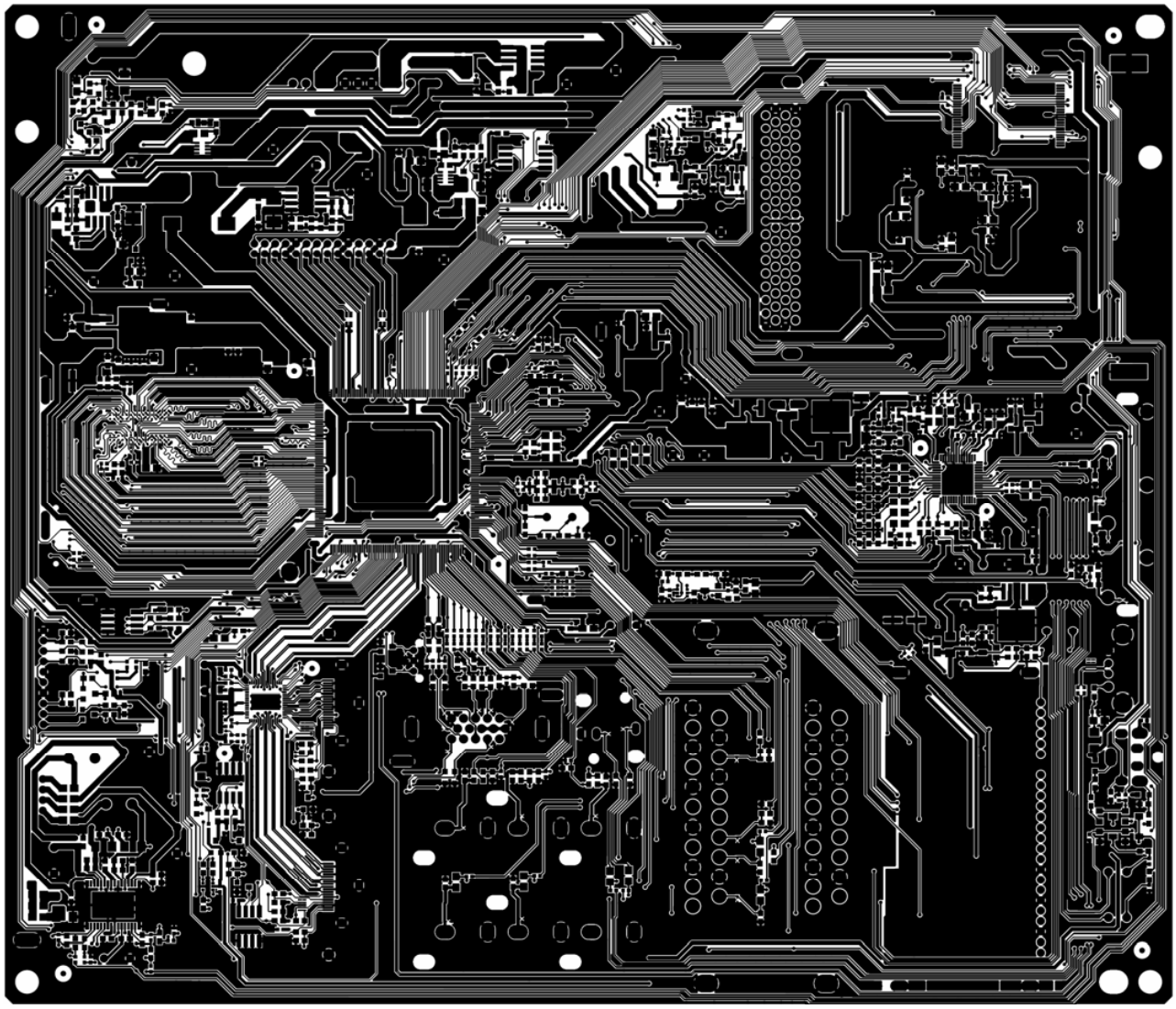

Downloaded from www.Manualslib.com manuals search engine

6.2 Power Board
LT26A1 715G3425P01000003S

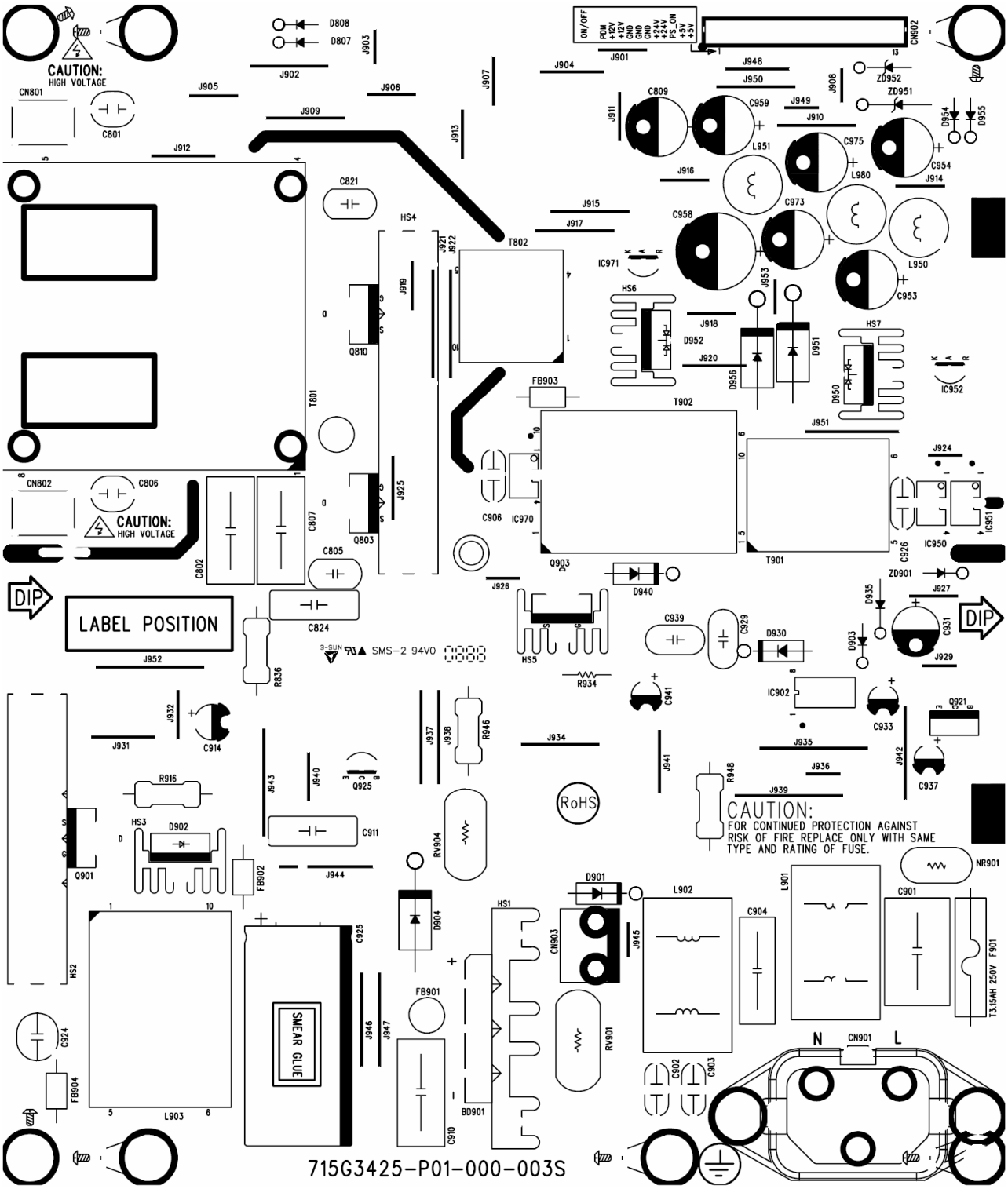

Downloaded from www.Manualslib.com manuals search engine

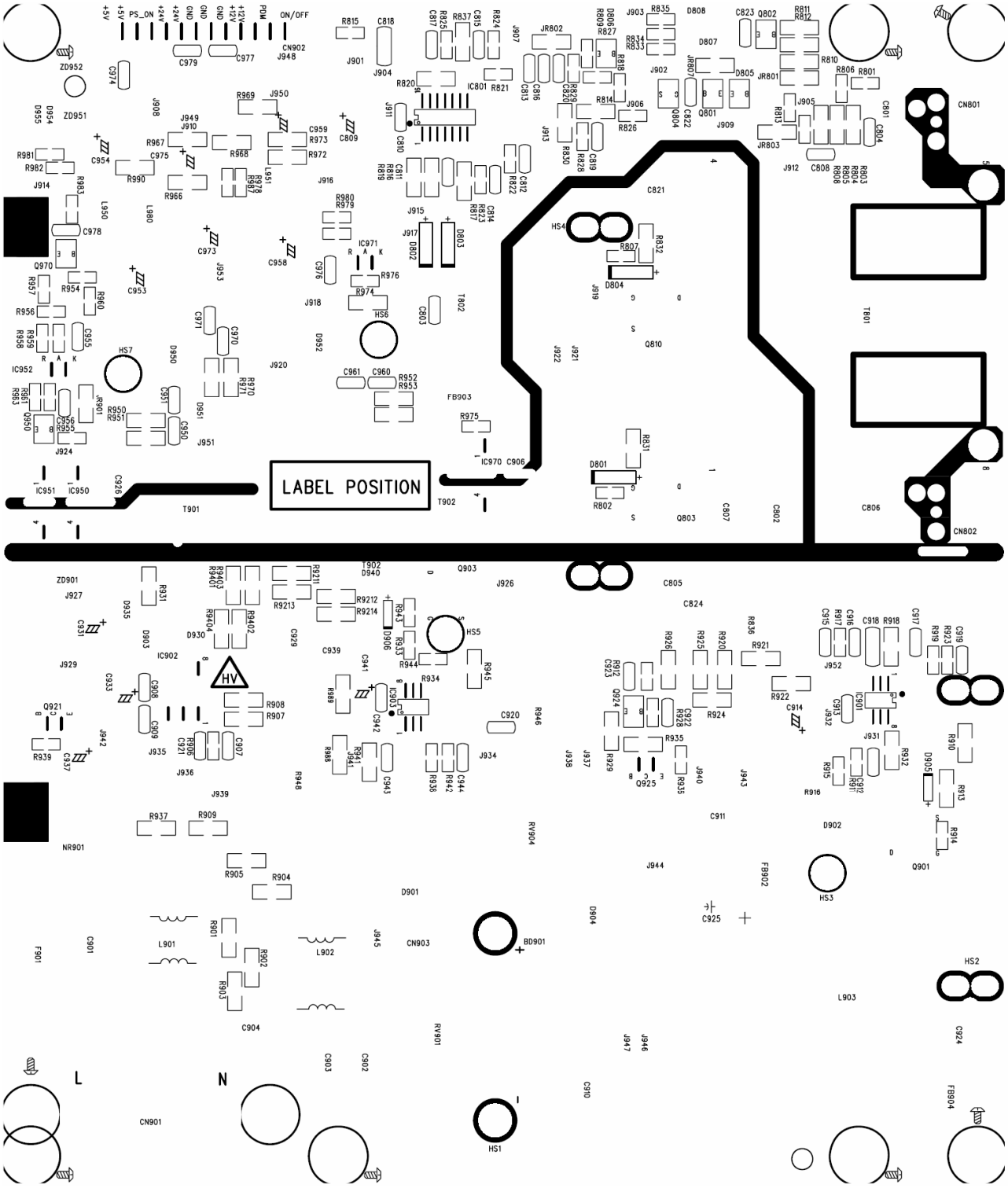

Downloaded from www.Manualslib.com manuals search engine

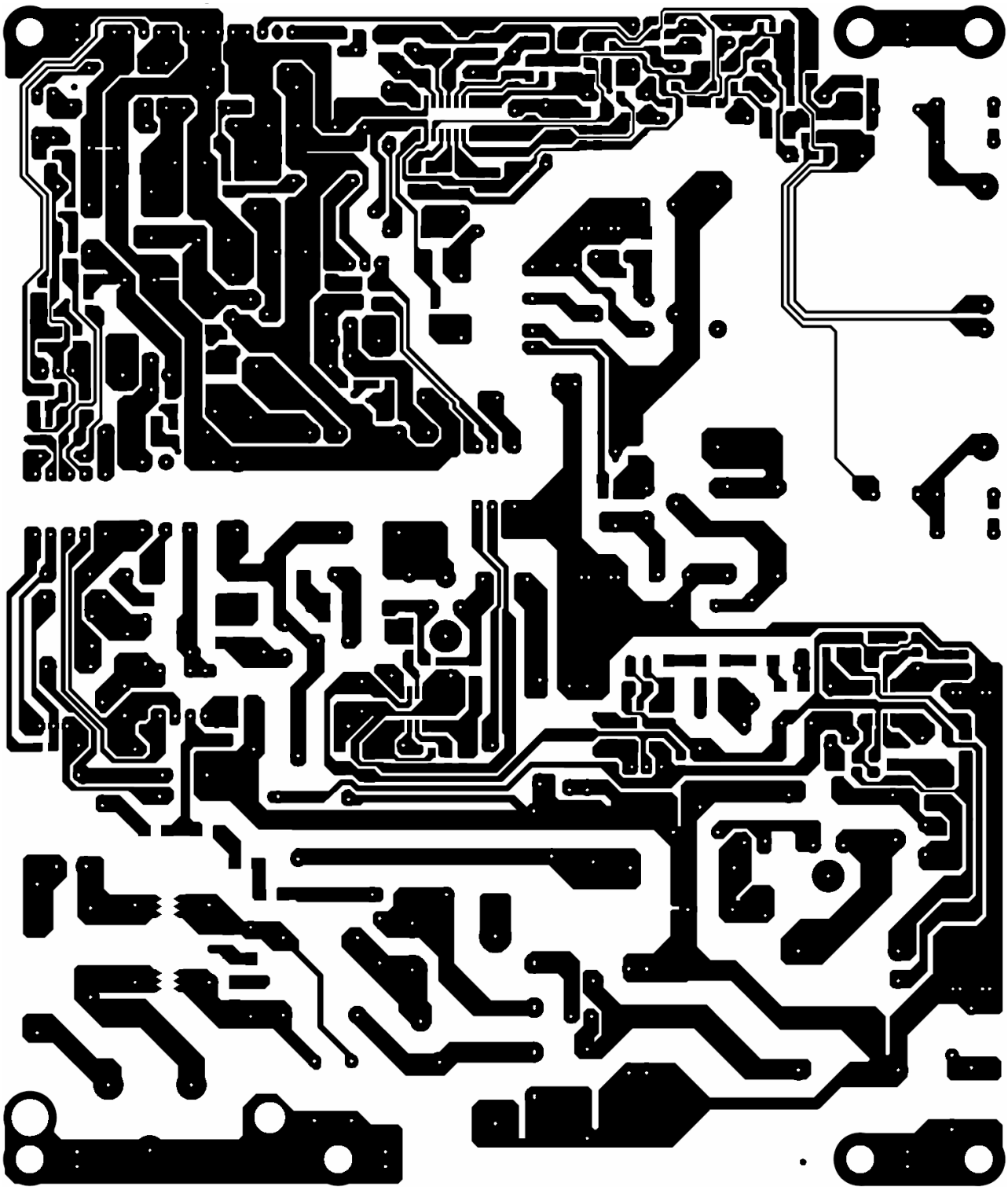

Downloaded from www.Manualslib.com manuals search engine

LT32A1 E32AG2NB3WH72N 715G3234P01H30003M

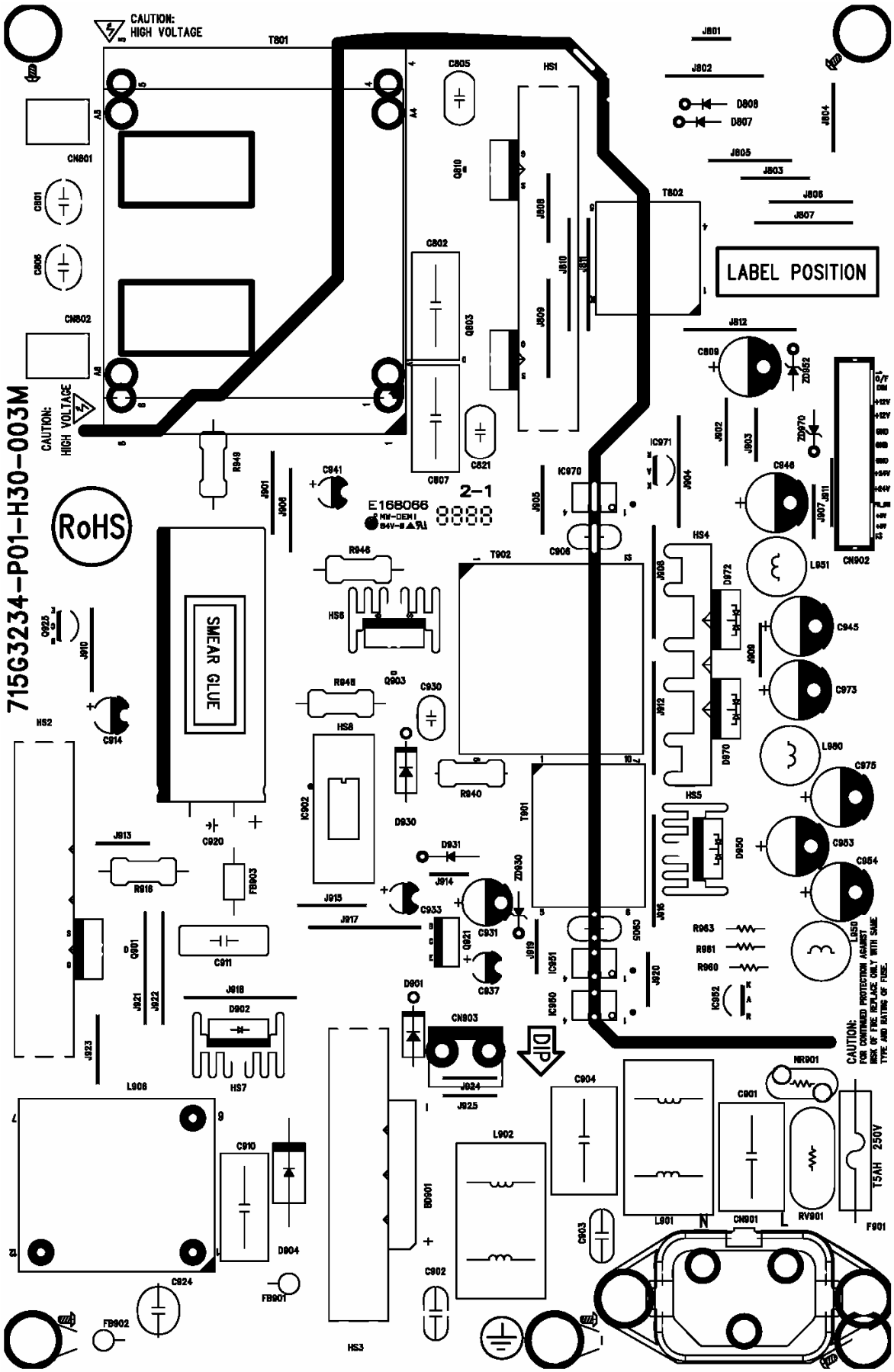

Downloaded from www.Manualslib.com manuals search engine

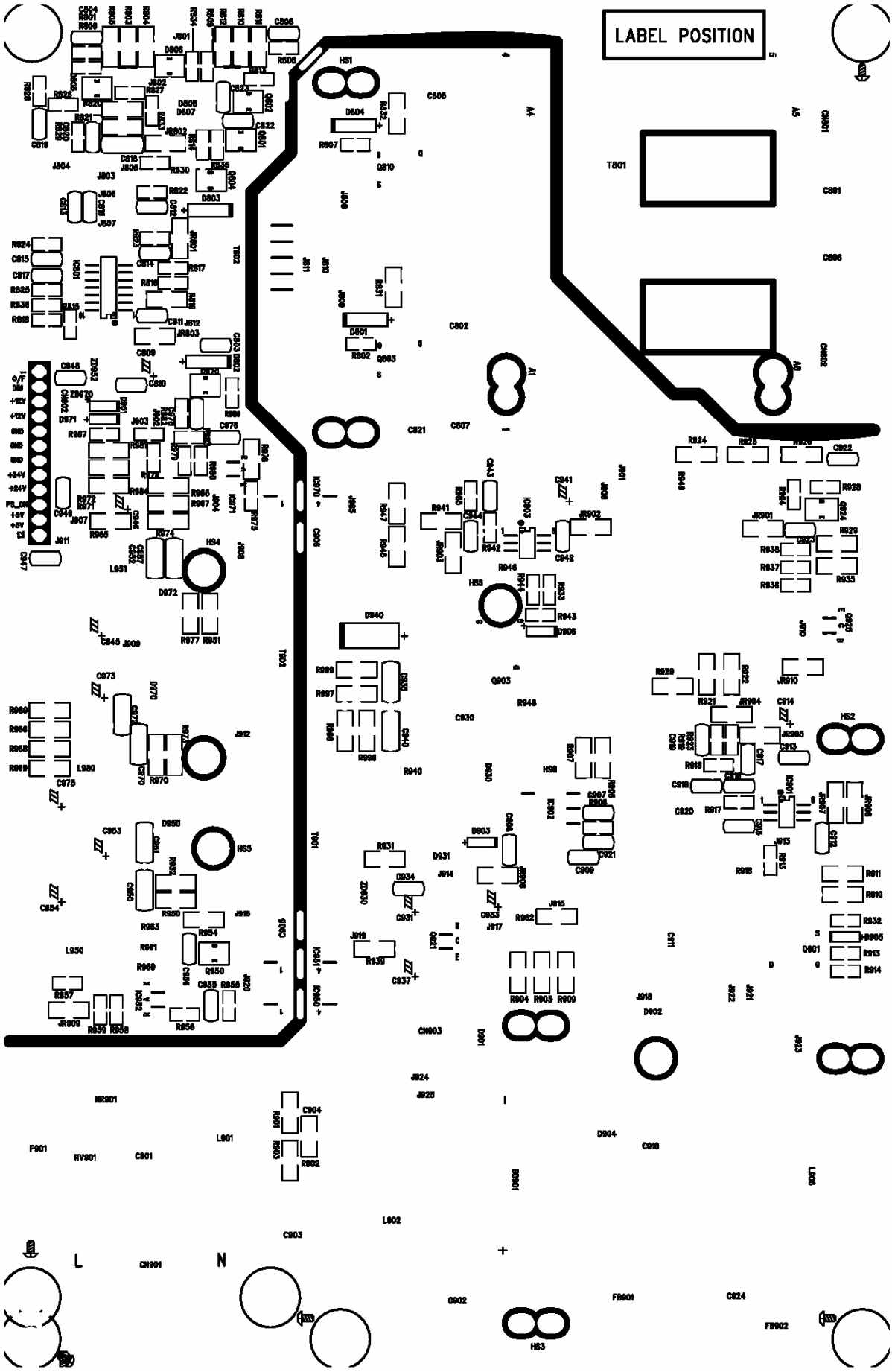

Downloaded from www.Manualslib.com manuals search engine

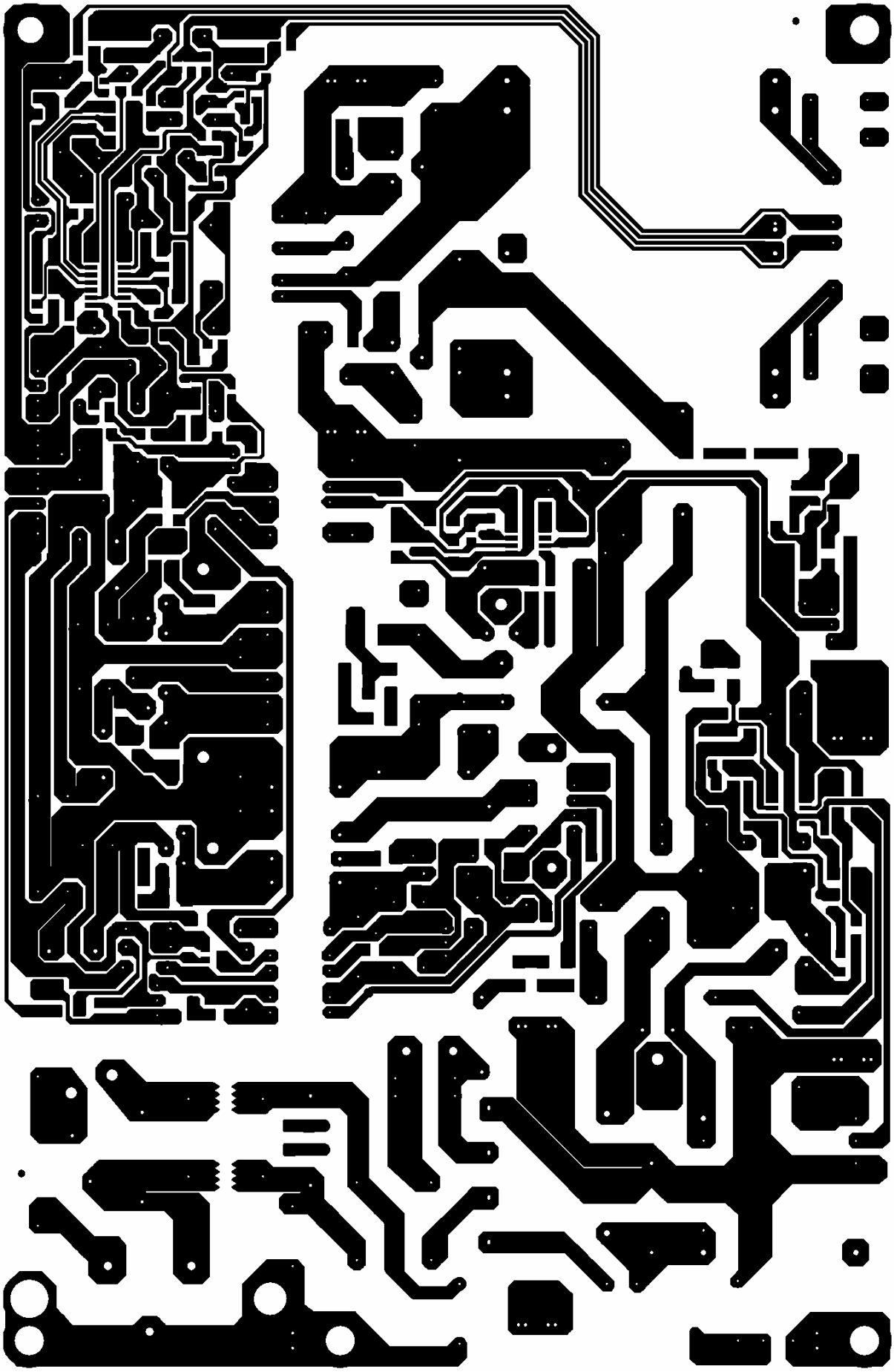

Downloaded from www.Manualslib.com manuals search engine

LT32A1 E32AA2NB3WH72N 715G3332 1

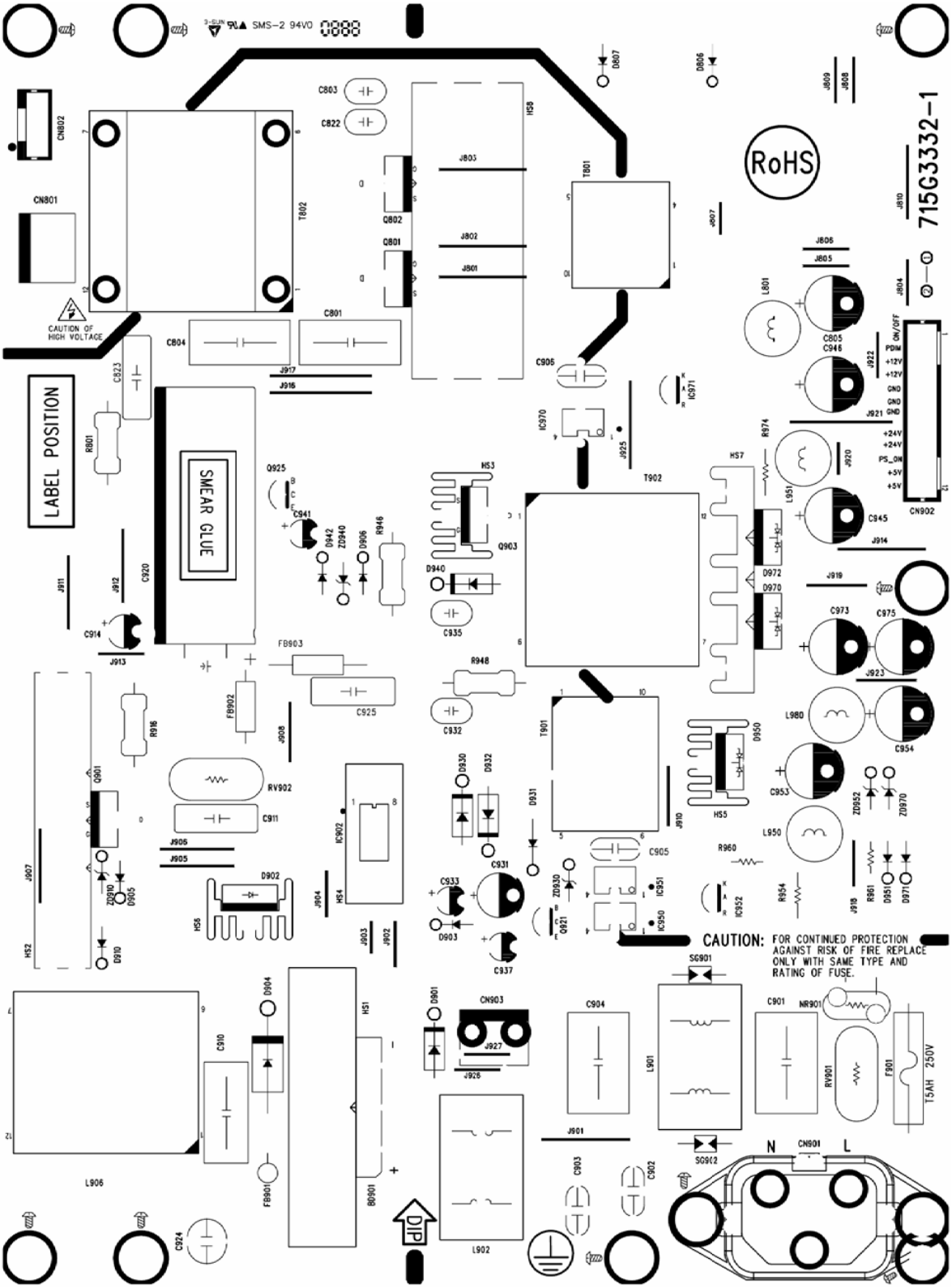

Downloaded from www.Manualslib.com manuals search engine

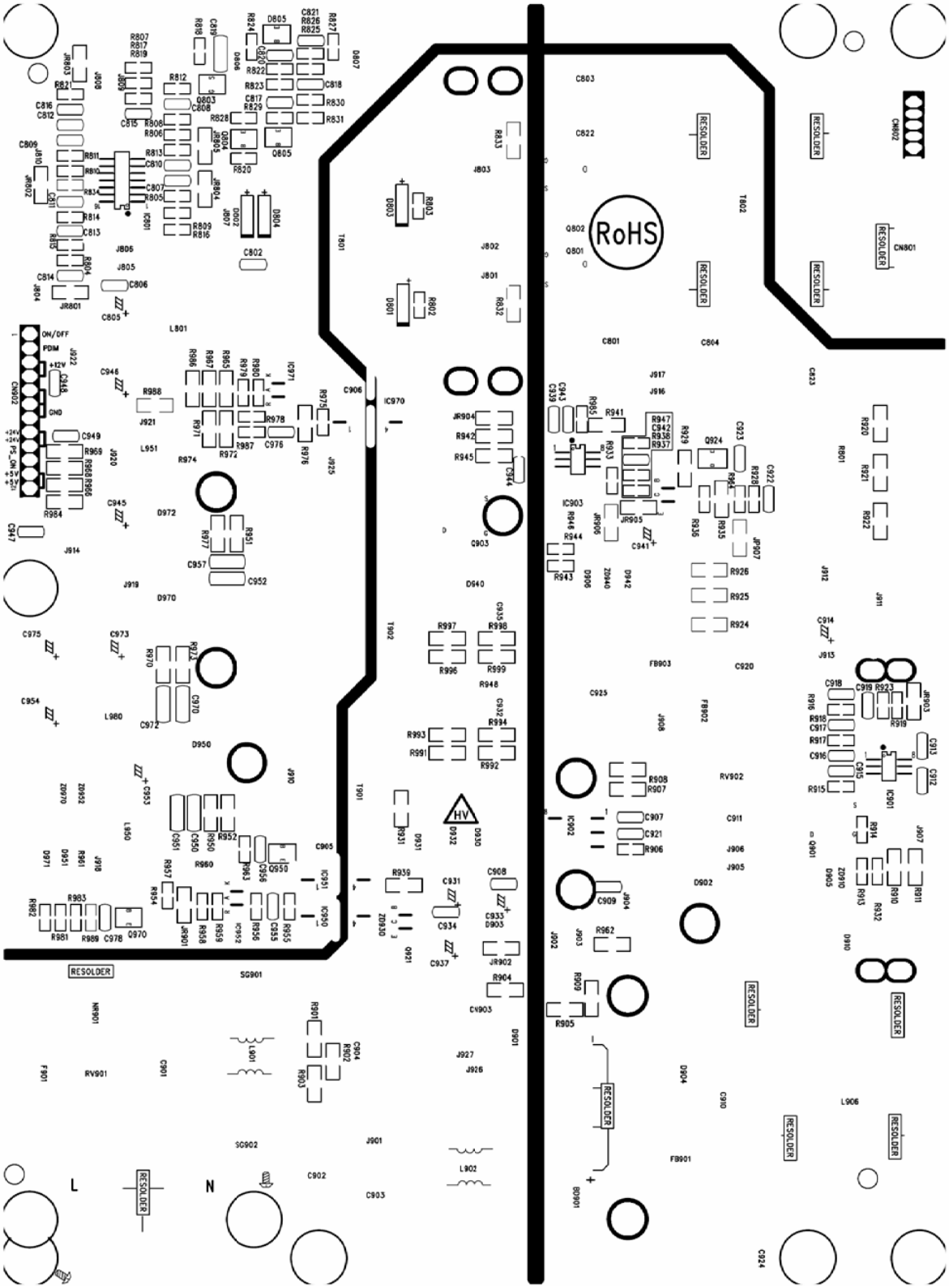

Downloaded from www.Manualslib.com manuals search engine

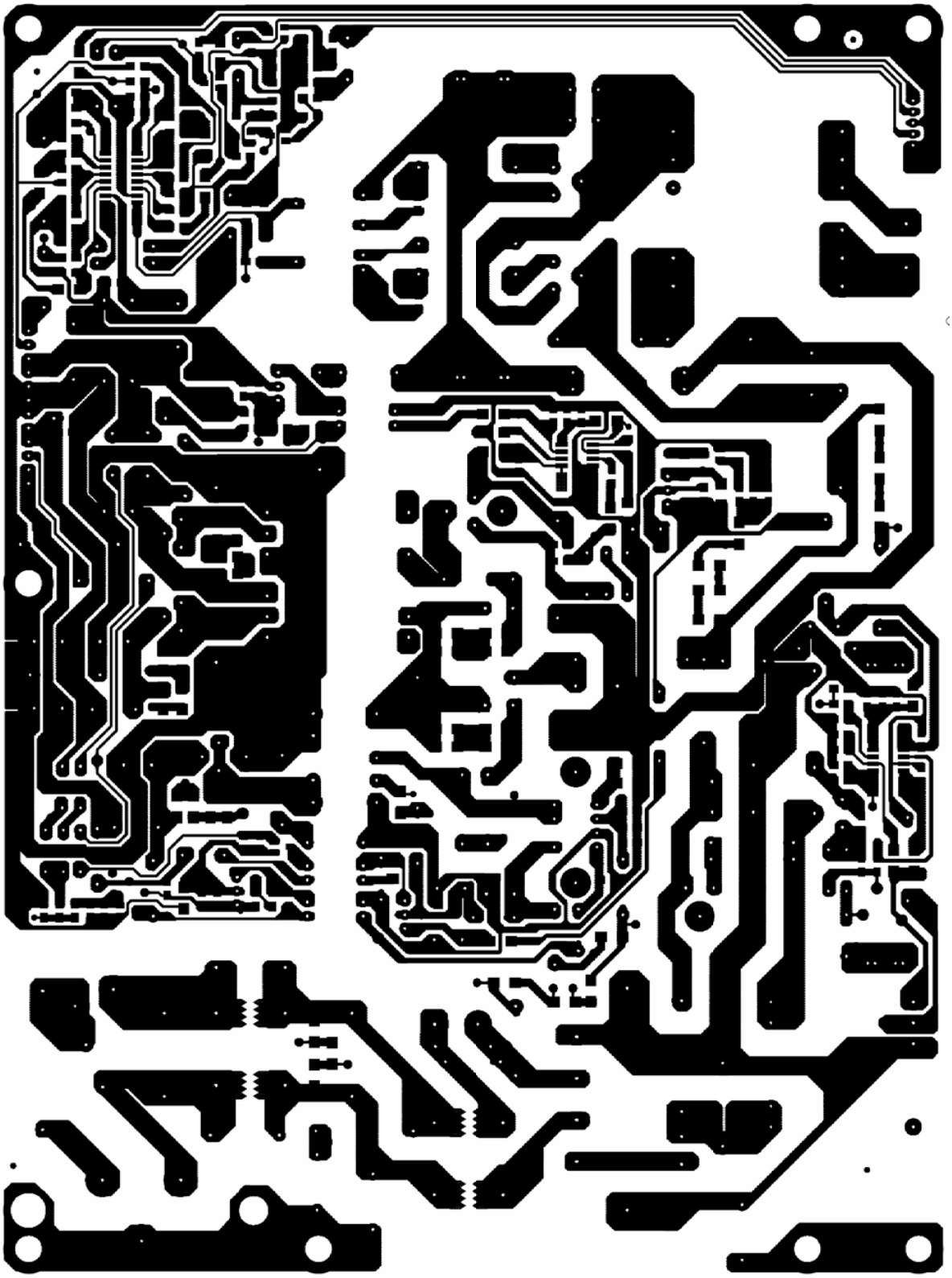

Downloaded from www.Manualslib.com manuals search engine

LT32A1 E32AA2NB3WH72N 715G3645P01W30003S

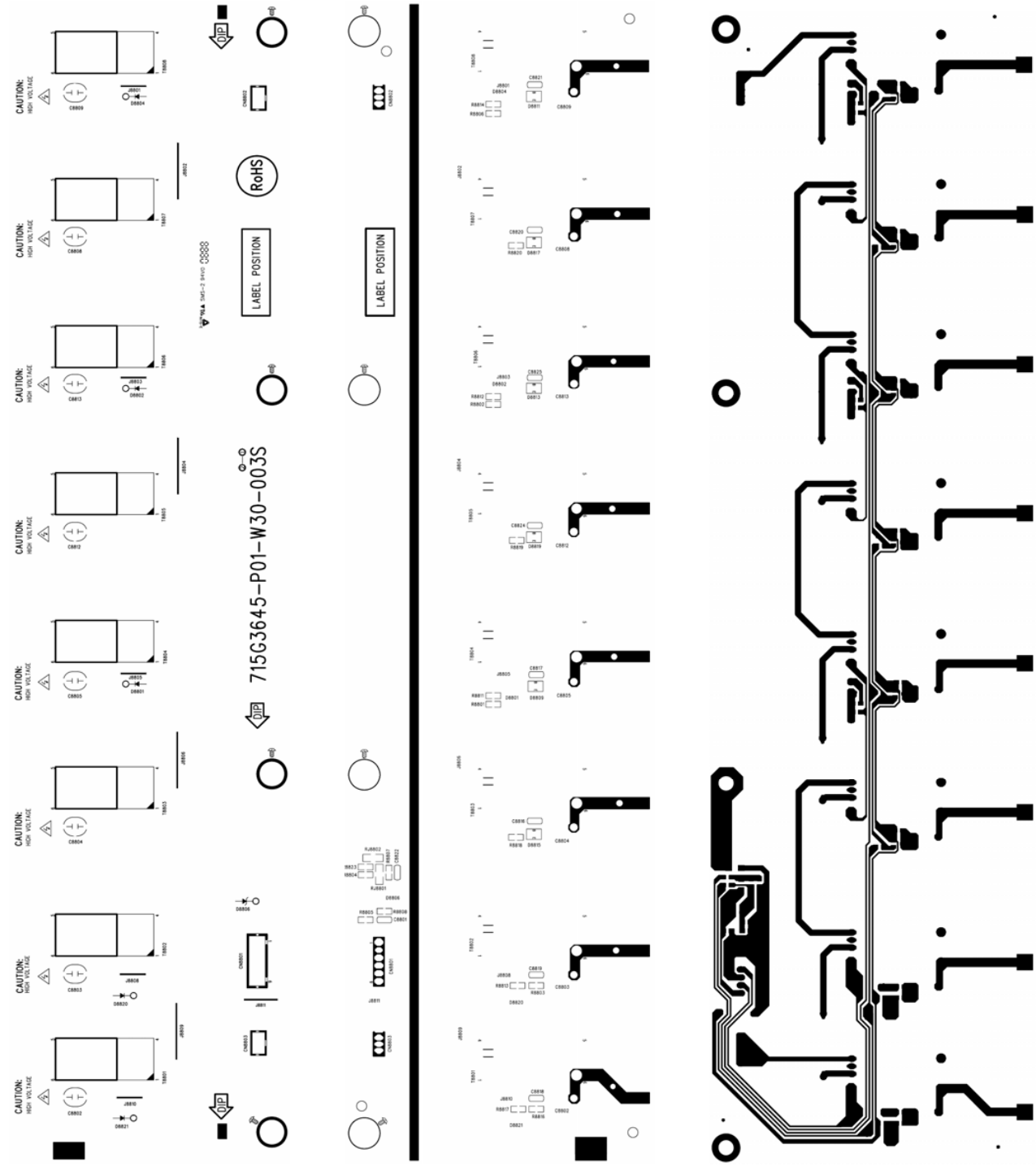

Downloaded from www.Manualslib.com manuals search engine

6.3 Key Board
715G3293K01001004S

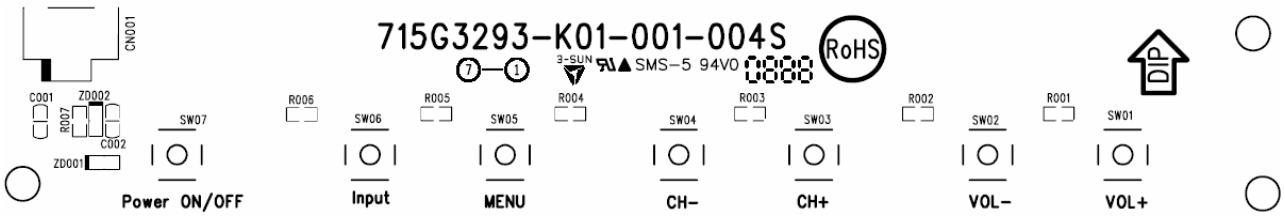

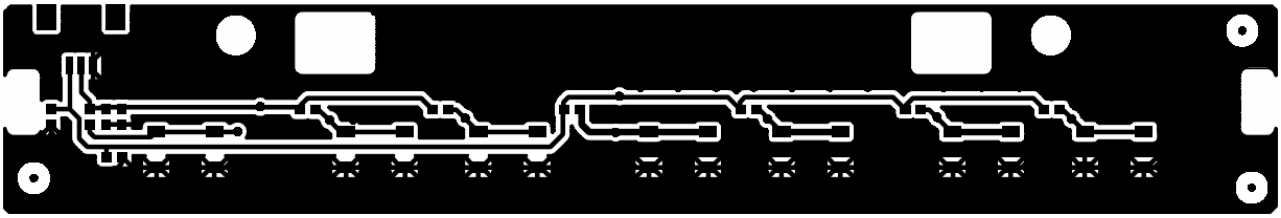

6.4 IR Board
LT26A1 715G3870R01000004M

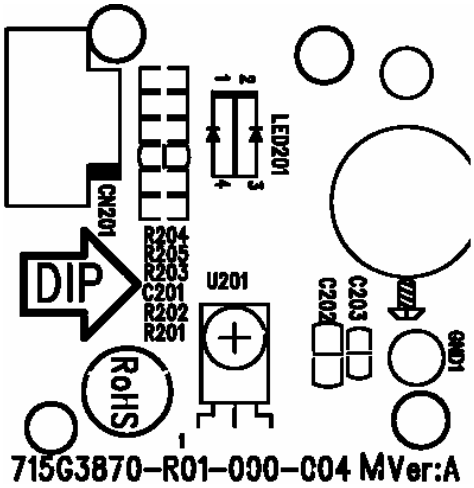

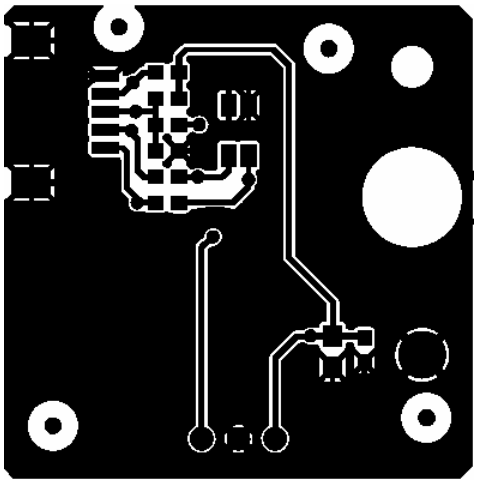

LT32A1 715G3478R01001004S

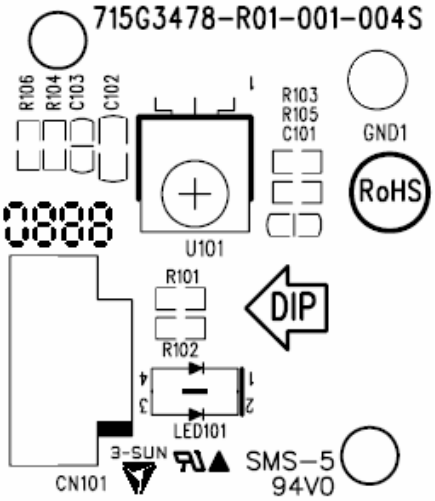

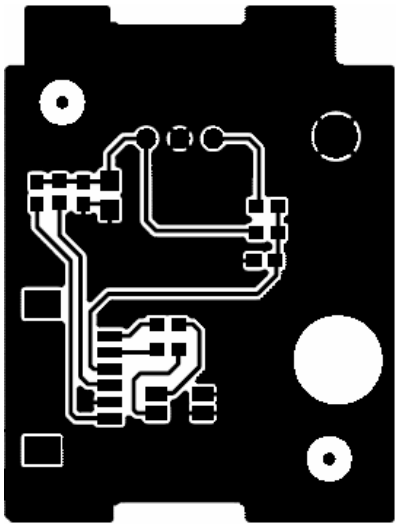

Downloaded from www.Manualslib.com manuals search engine

7. Adjustment

It’s no need to adjust the white balance for this model.

1. Enter into the factory mode:

Turn on the TV, press MENU key with remote control, then press number key 1 → 9 → 9 → 9. It will achieve the factory mode.

2. Click on "Auto Color" in the PC and COMPONENT models:

PC mode: TIM = 137; PAT = 42

COMPONENT mode: TIM = 316; PAT = 185

Downloaded from www.Manualslib.com manuals search engine

8. Block Diagram

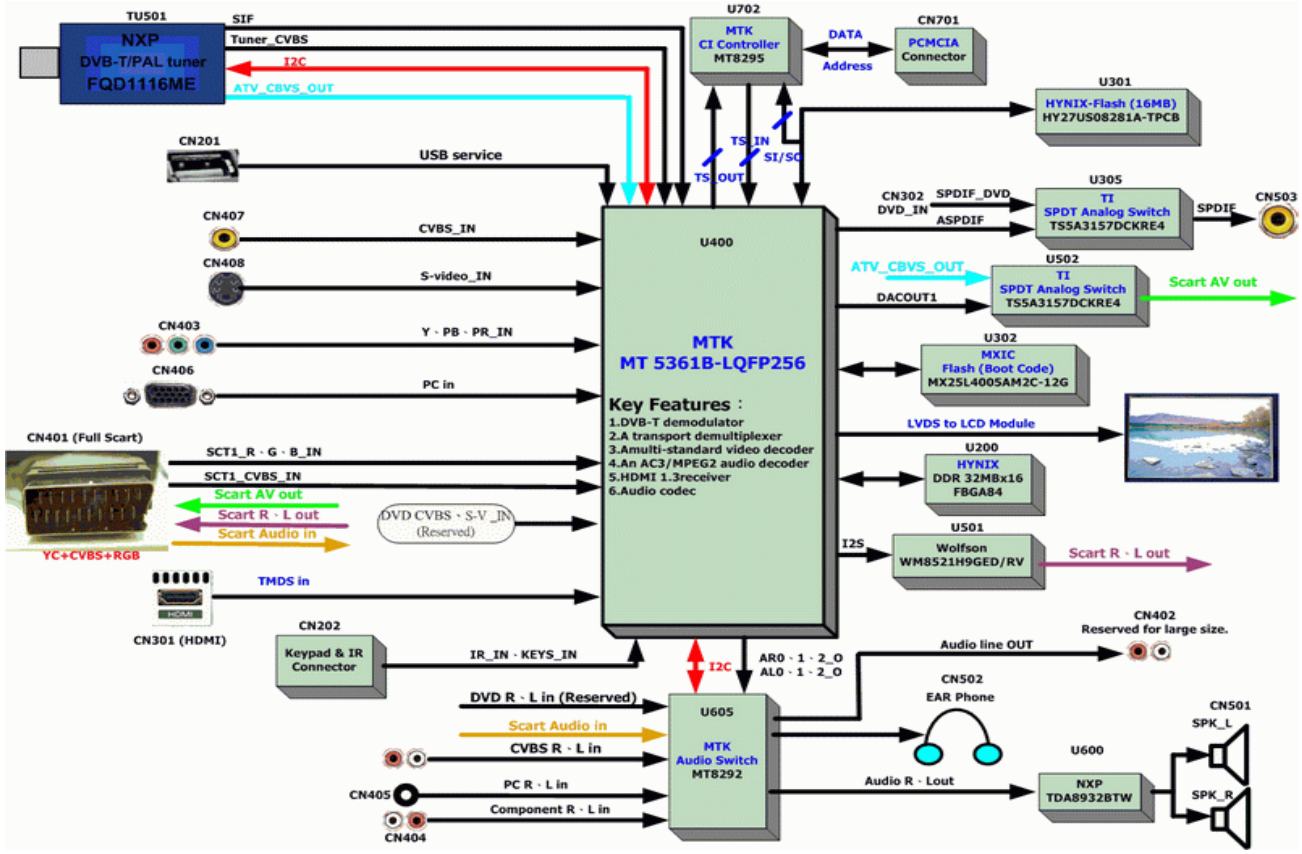

Downloaded from www.Manualslib.com manuals search engine

9. Wiring Diagram

LT26A1

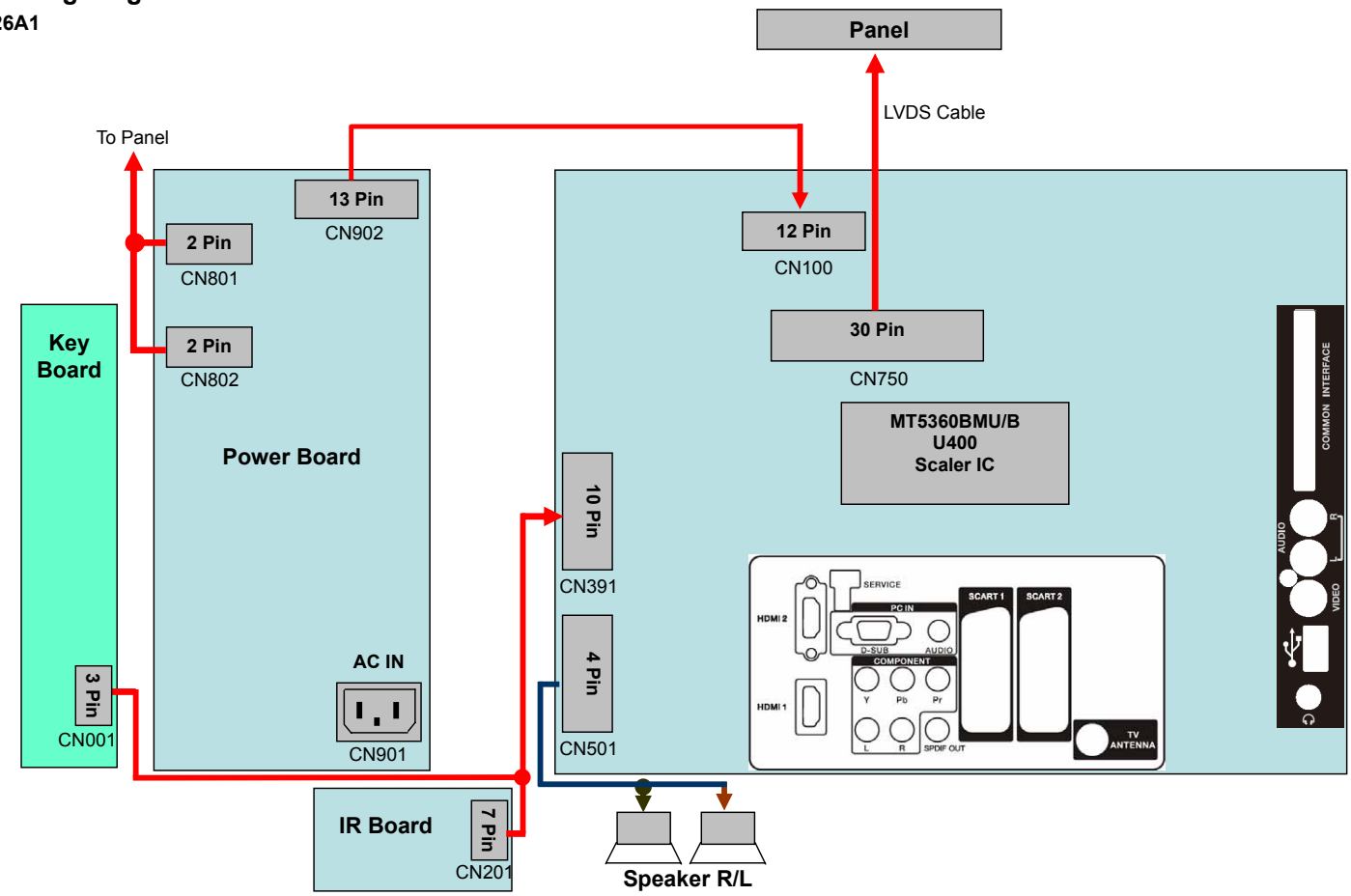

Downloaded from www.Manualslib.com manuals search engine

LT32A1

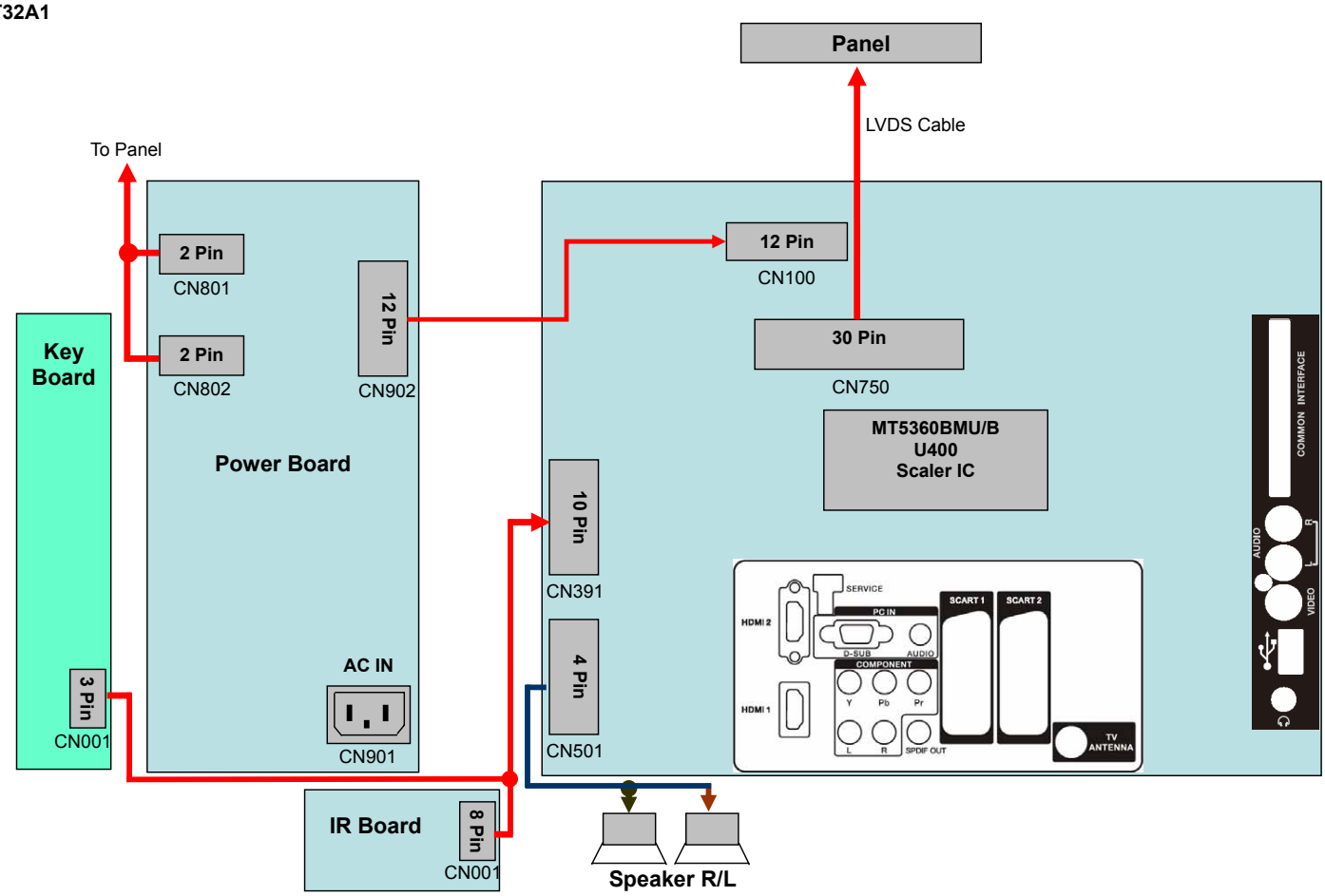

Downloaded from www.Manualslib.com manuals search engine

10. Schematic Diagram

10.1 Main Board

LT26A1 715G3693M01000004K/LT32A1 715G3693M01001004K

3) Power 1

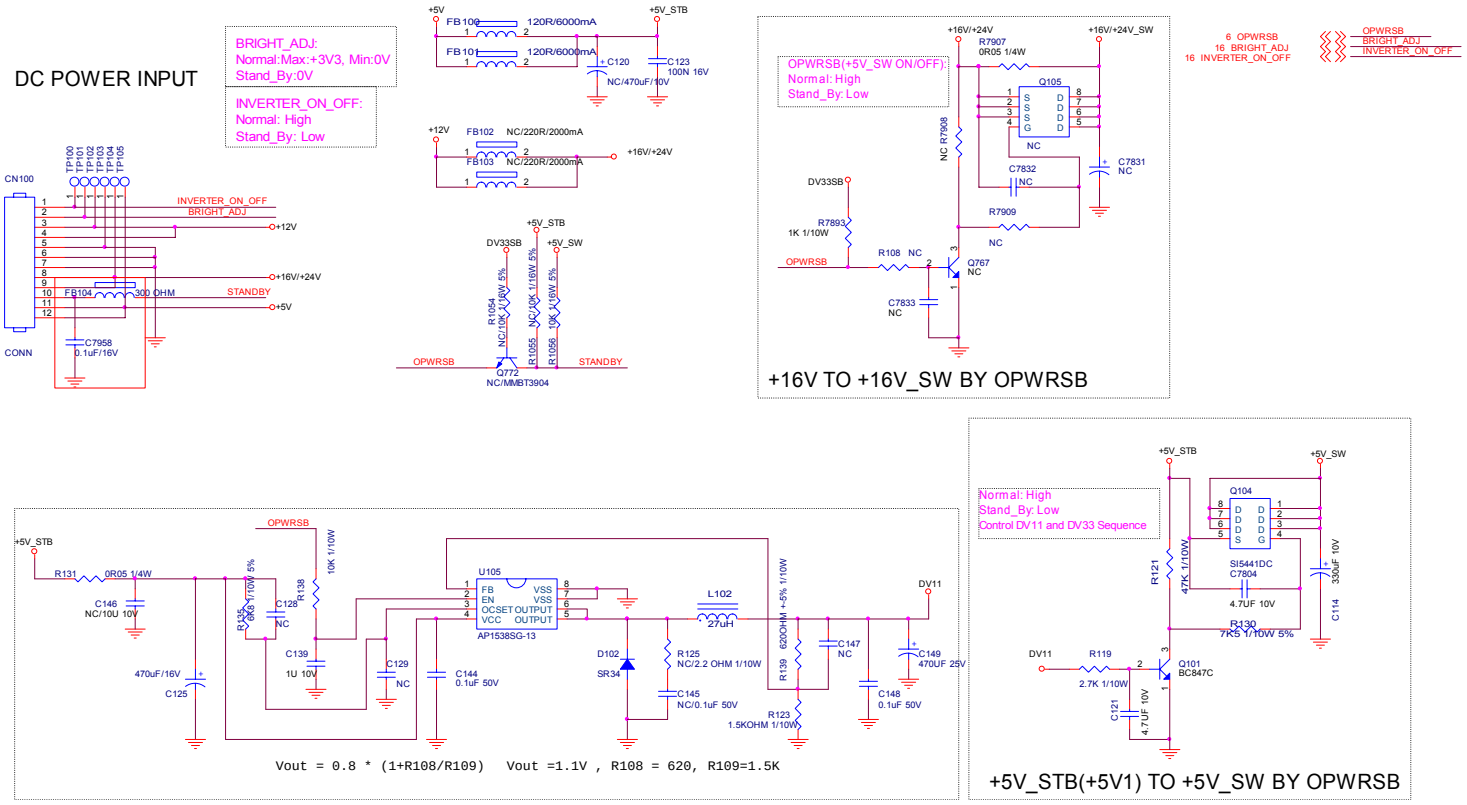

Downloaded from www.Manualslib.com manuals search engine

4) Power 2

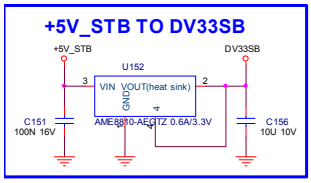

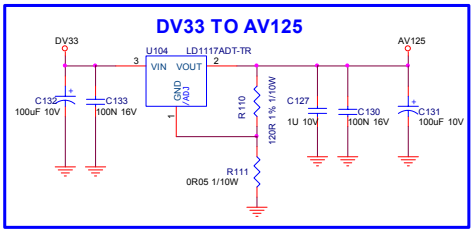

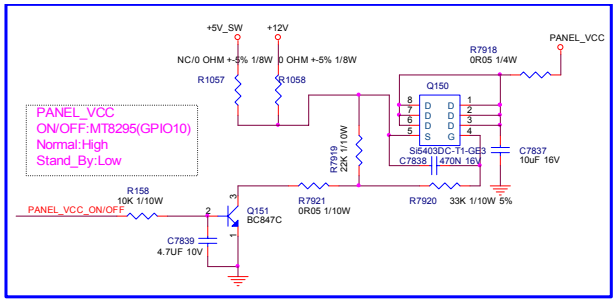

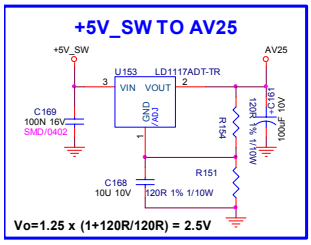

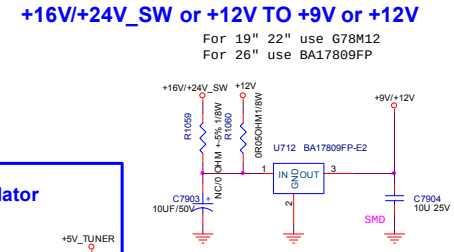

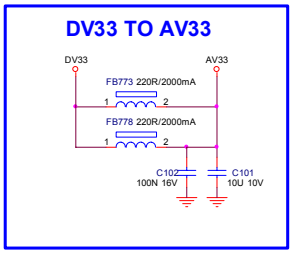

15 PANEL_VCC_ON/OFF PANEL_VCC_ON/OFF

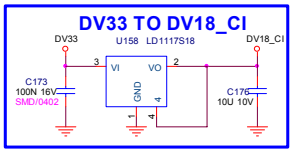

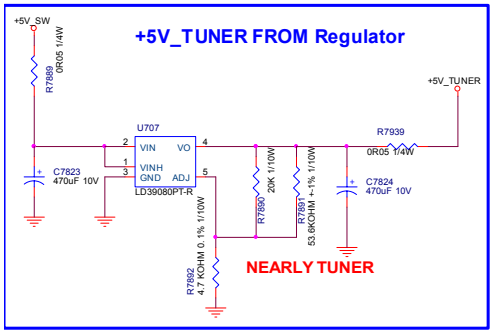

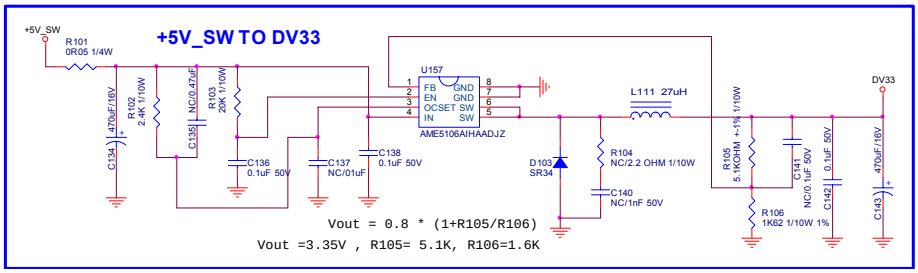

Downloaded from www.Manualslib.com manuals search engine

5) DRAM

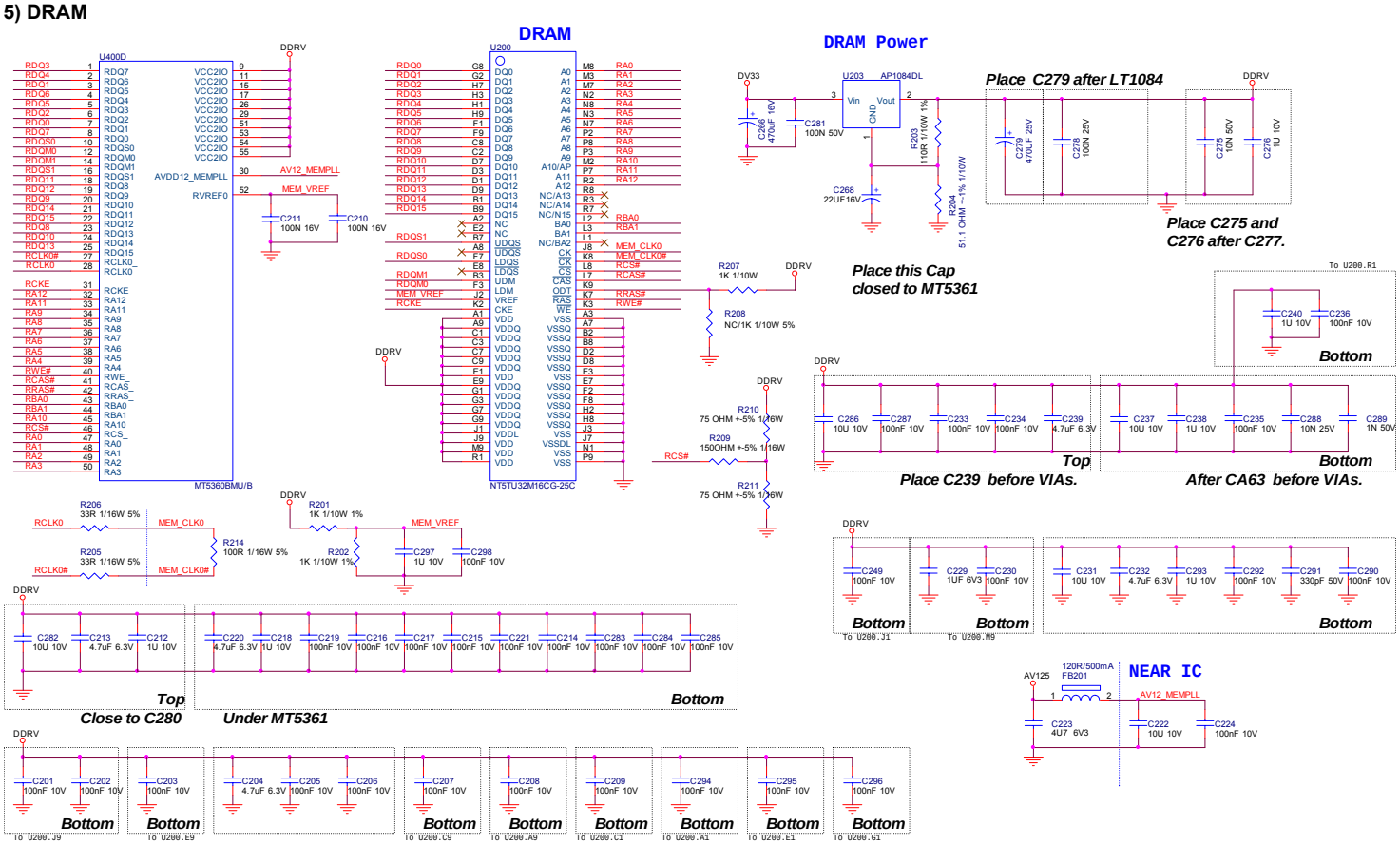

Downloaded from www.Manualslib.com manuals search engine

6) Peripheral

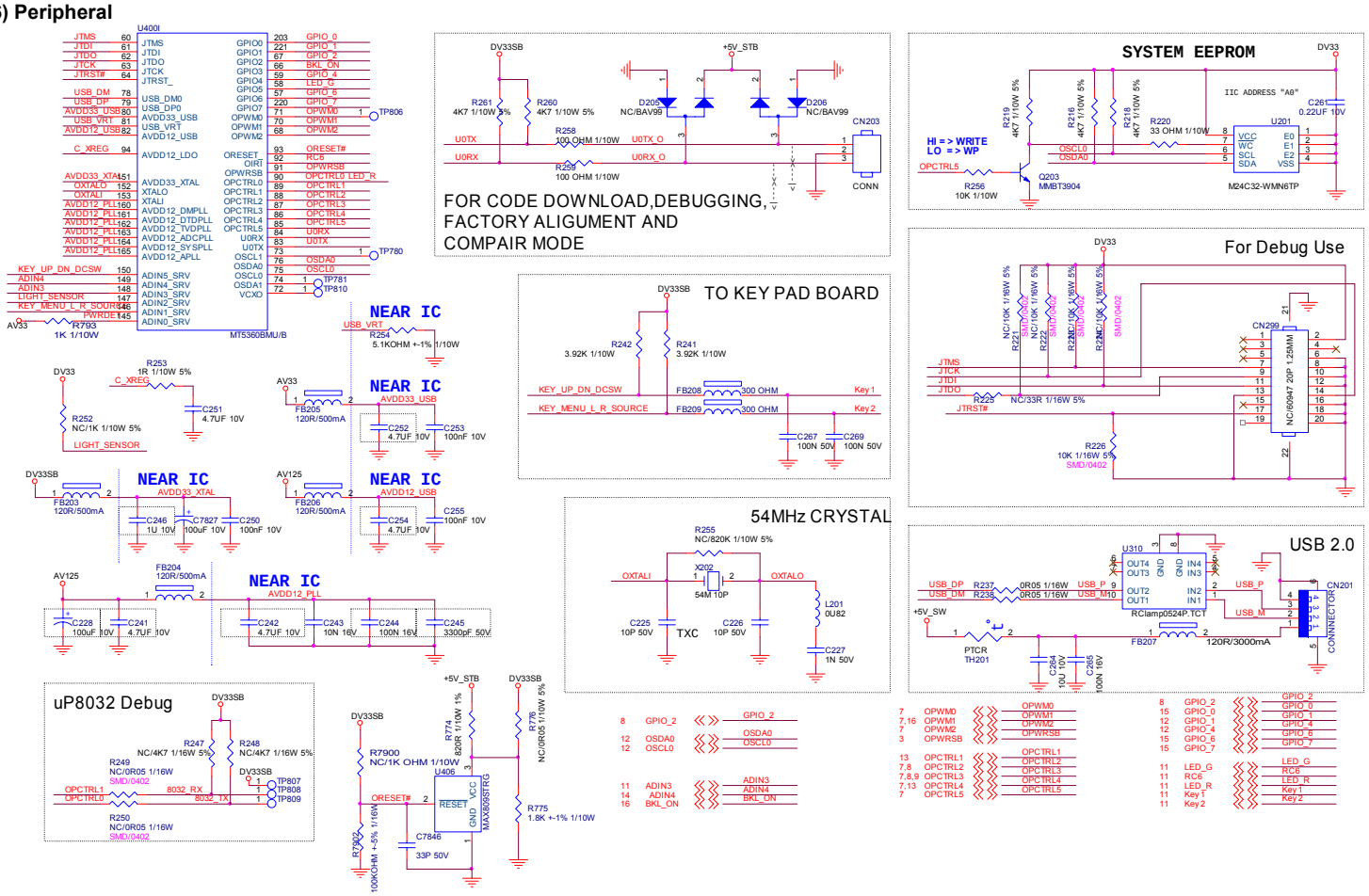

Downloaded from www.Manualslib.com manuals search engine

7) FLASH/TRAP/BYPASS/FCI

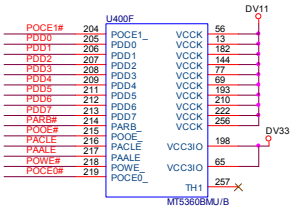

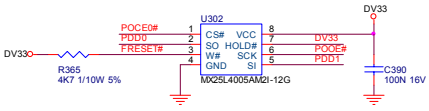

512KB Nor Flash for Boot Code

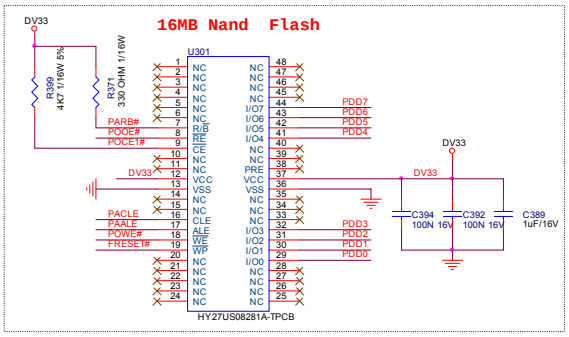

MT5361 STRAPPING MODE

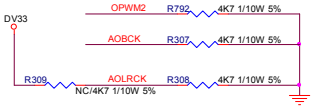

Strapping Mode	OPWM2	AOBCK	AOLRCK
Normal mode	0	0	0
ICE mode	0	0	1
CPU model mode	0	1	0

Trap Mode	OPCTRL5	OPCTRL4
Core Reset 1us	0	0
Core Reset 3.3V	0	1
SCAN mode	1	0
Core Reset 0.9V	1	1

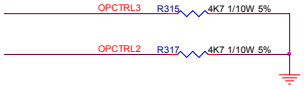

Strapping Mode	OPCTRL3(O)	OPCTRL2(O)
XTAL 54MHz	0	0
XTAL 27MHz	1	0

Strapping Mode	OPWM0(O)	OPWM1(O)
Nor Boot	0	0
NAND Boot	0	1
large NAND Boot	1	0

I/O BYPASS Cap.

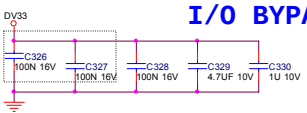

Core Power BYPASS Cap.

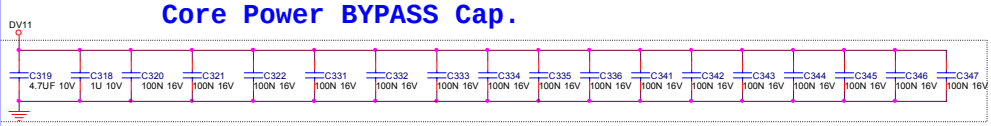

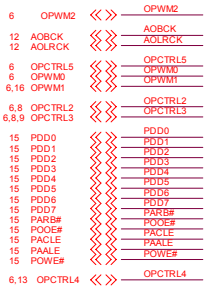

Downloaded from www.Manualslib.com manuals search engine

8) HDMI/SPDIF Out

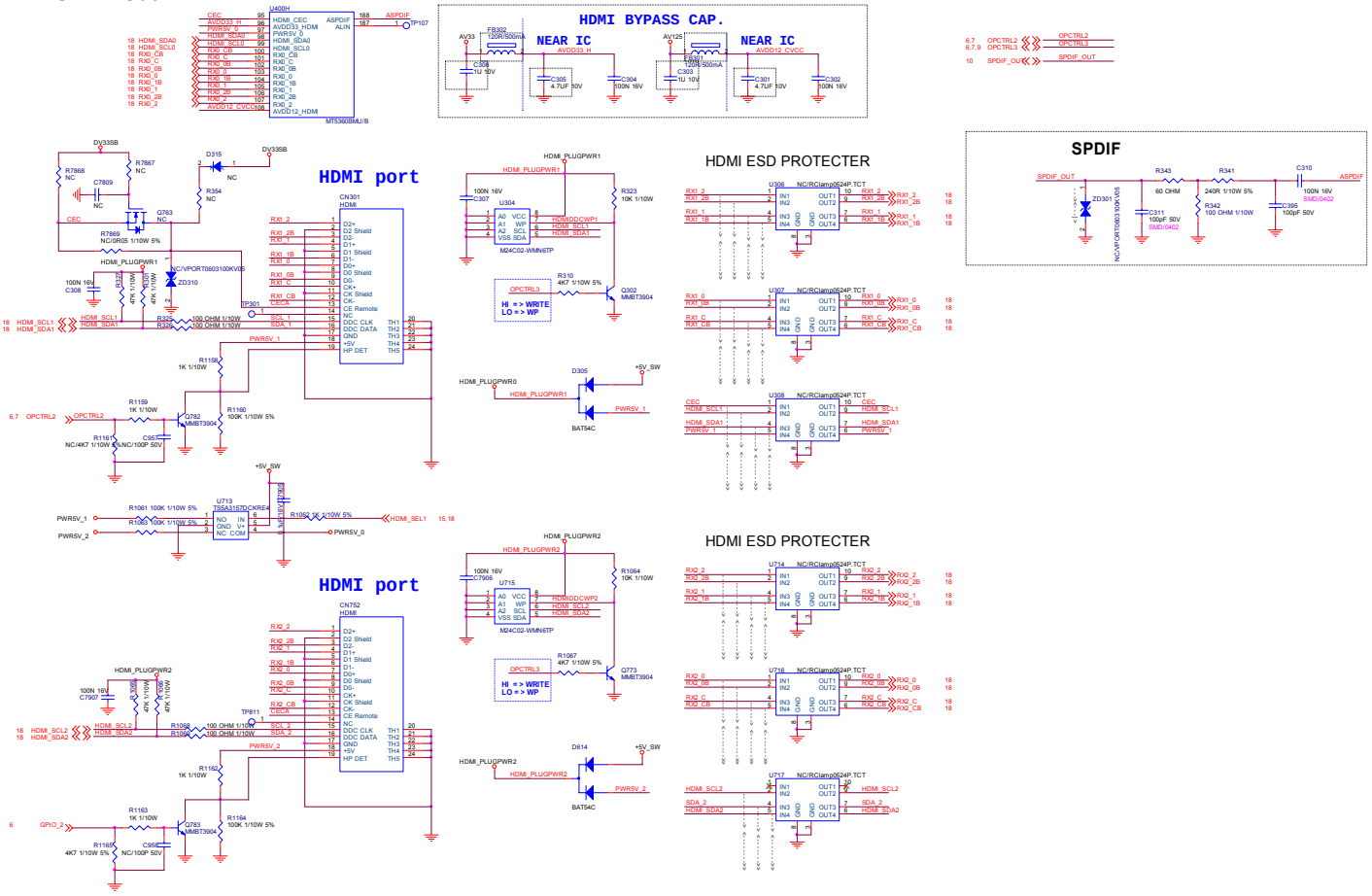

Downloaded from www.Manualslib.com manuals search engine

9) Video/Audio Input

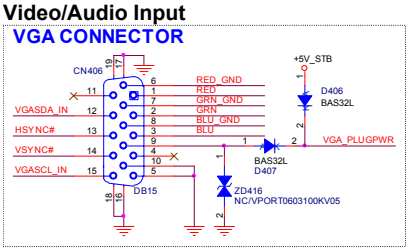

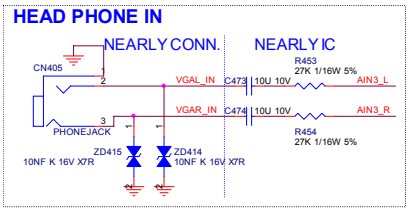

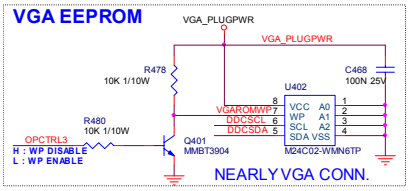

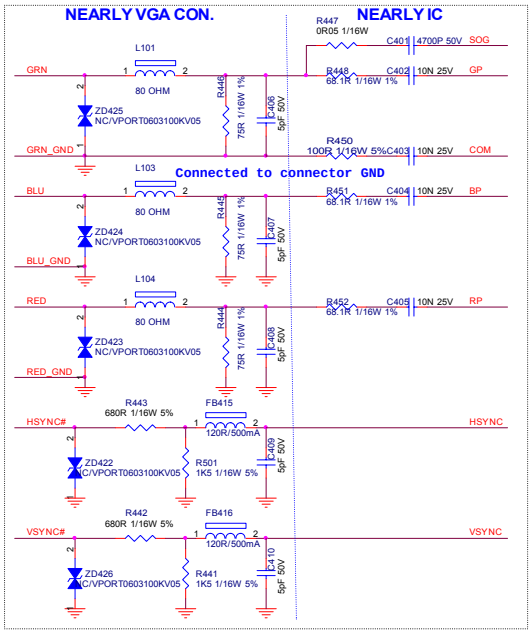

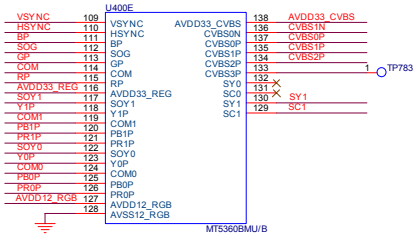

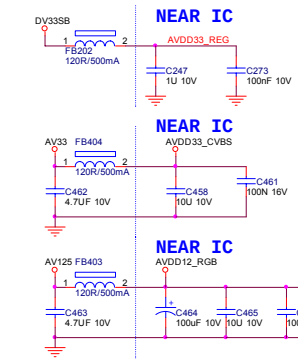

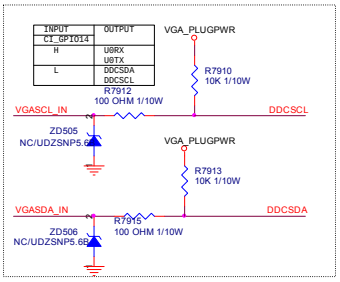

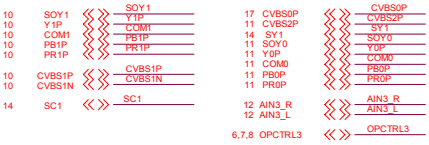

Downloaded from www.Manualslib.com manuals search engine

10) YPBPR_AV In

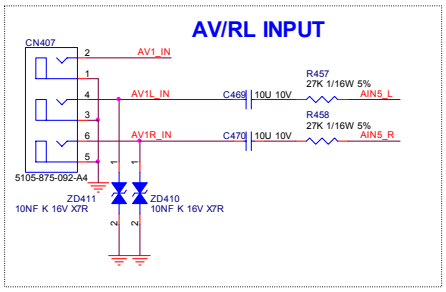

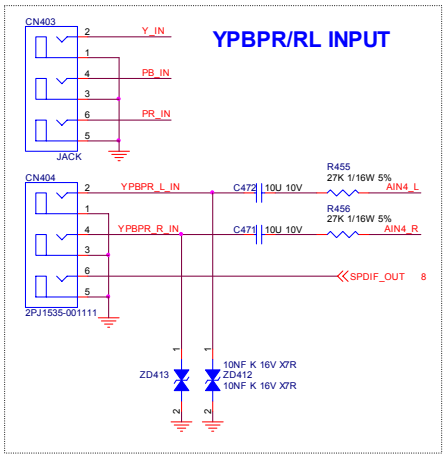

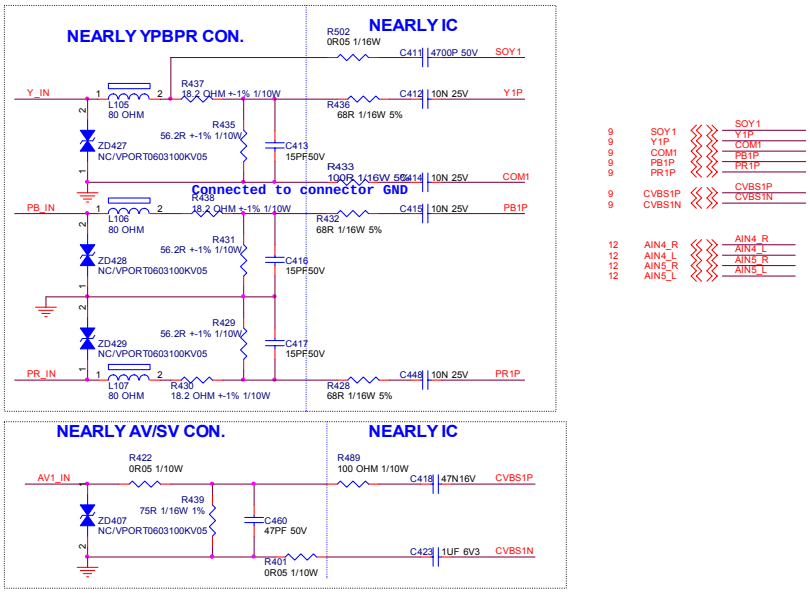

Downloaded from www.Manualslib.com manuals search engine

11) Scart/AV Out and IR_Key

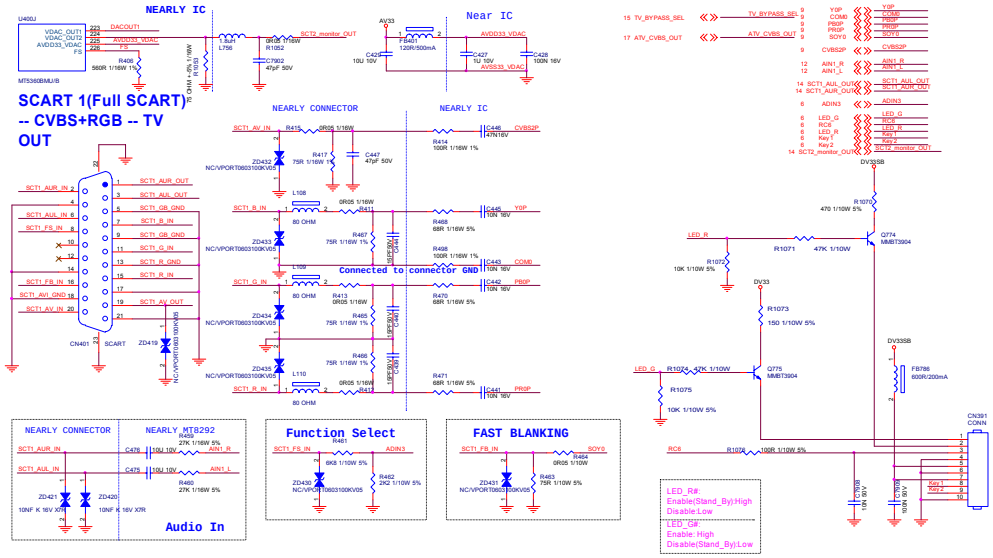

TV_SCART_CVBS_BYPASS MUX

MUX_SELECT	TV_BYPASS_SEL
ATV_CVBS_BYPASS	0
DTV_CVBS_BYPASS	1

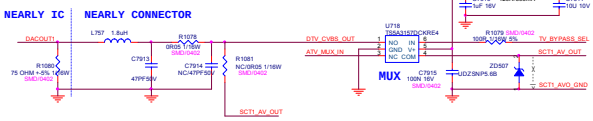

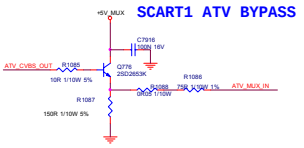

Downloaded from www.Manualslib.com manuals search engine

12) Audio SYS/Switching

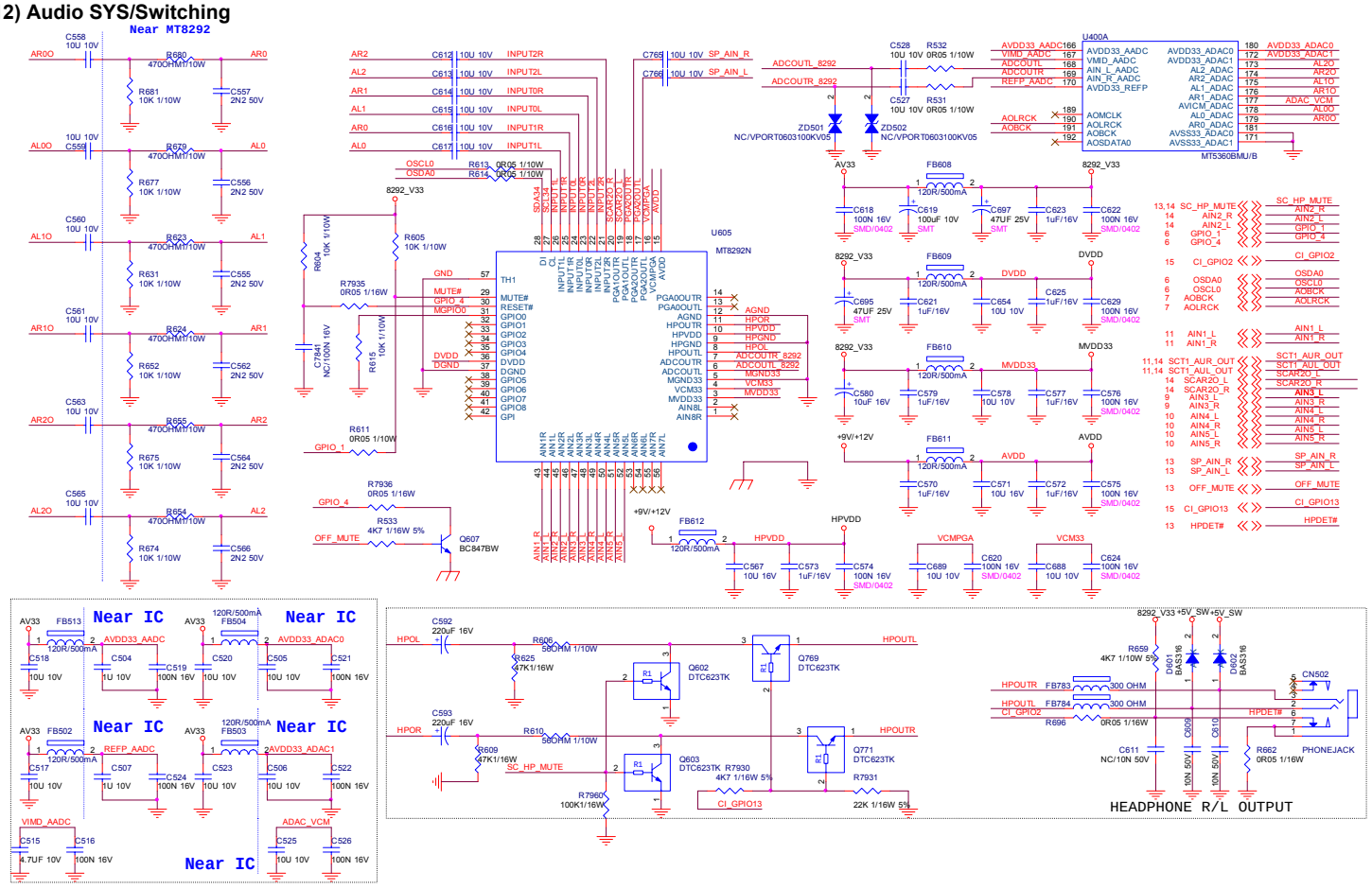

Downloaded from www.Manualslib.com manuals search engine

13) Audio Amplifier

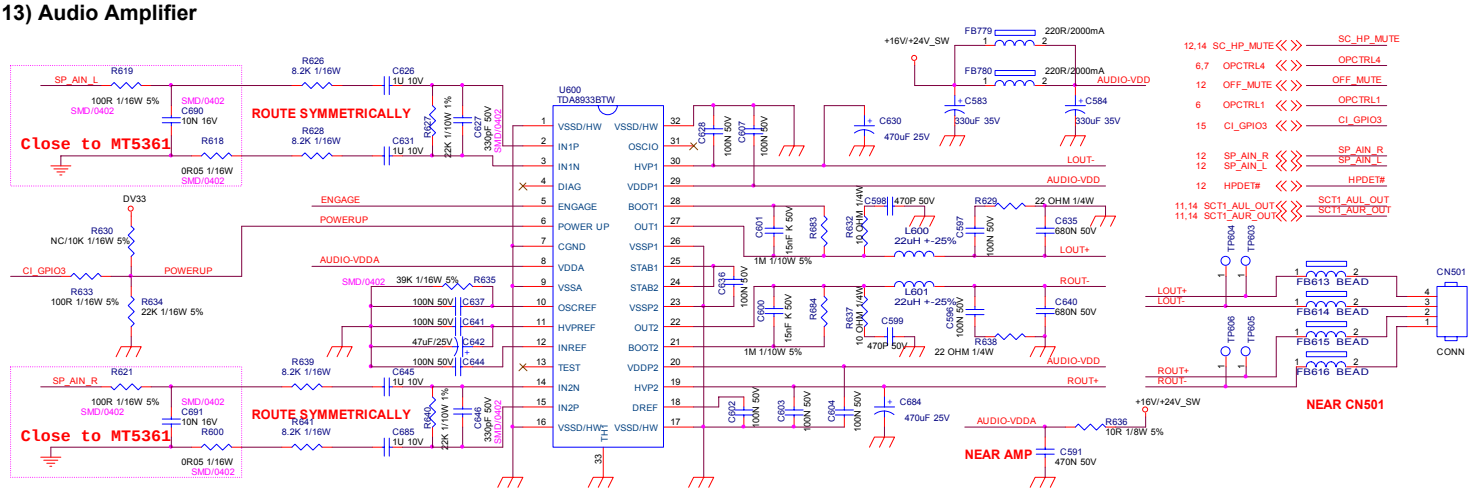

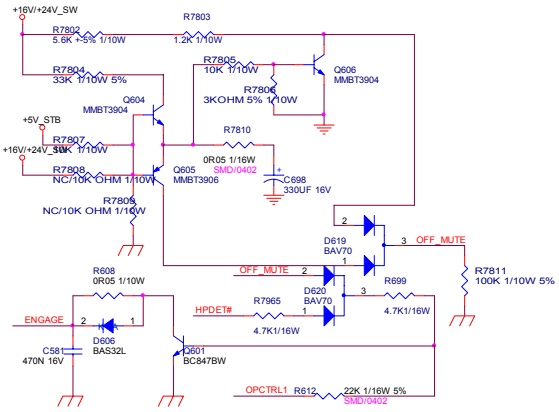

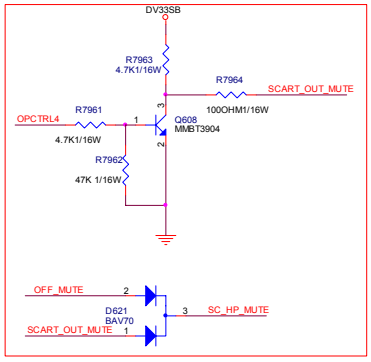

Downloaded from www.Manualslib.com manuals search engine

14) Half Scart2/DAC

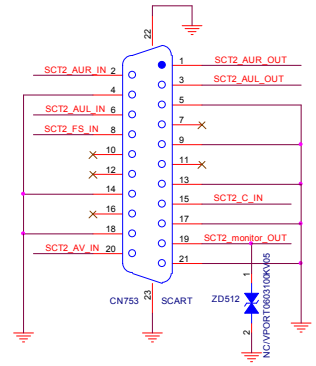

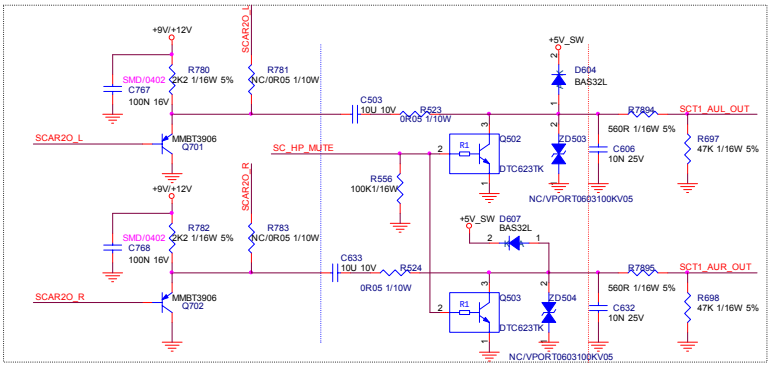

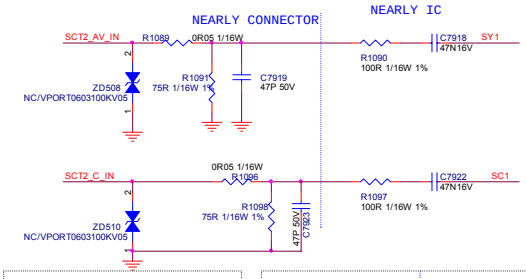

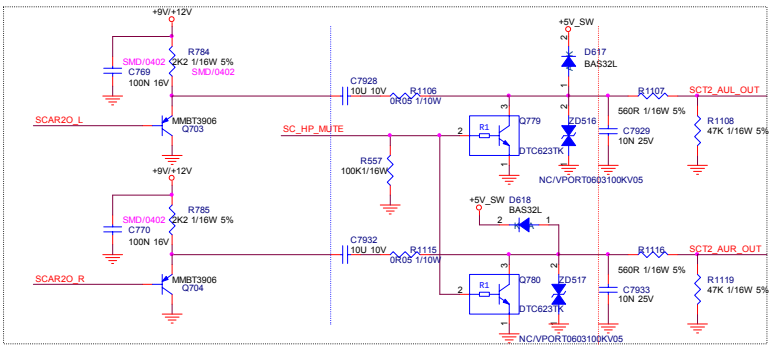

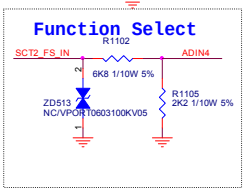

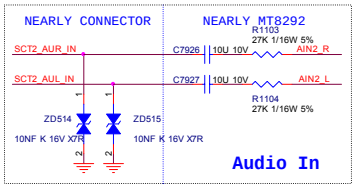

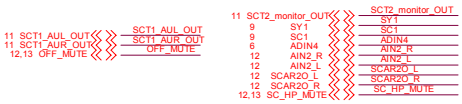

Downloaded from www.Manualslib.com manuals search engine

15) CI

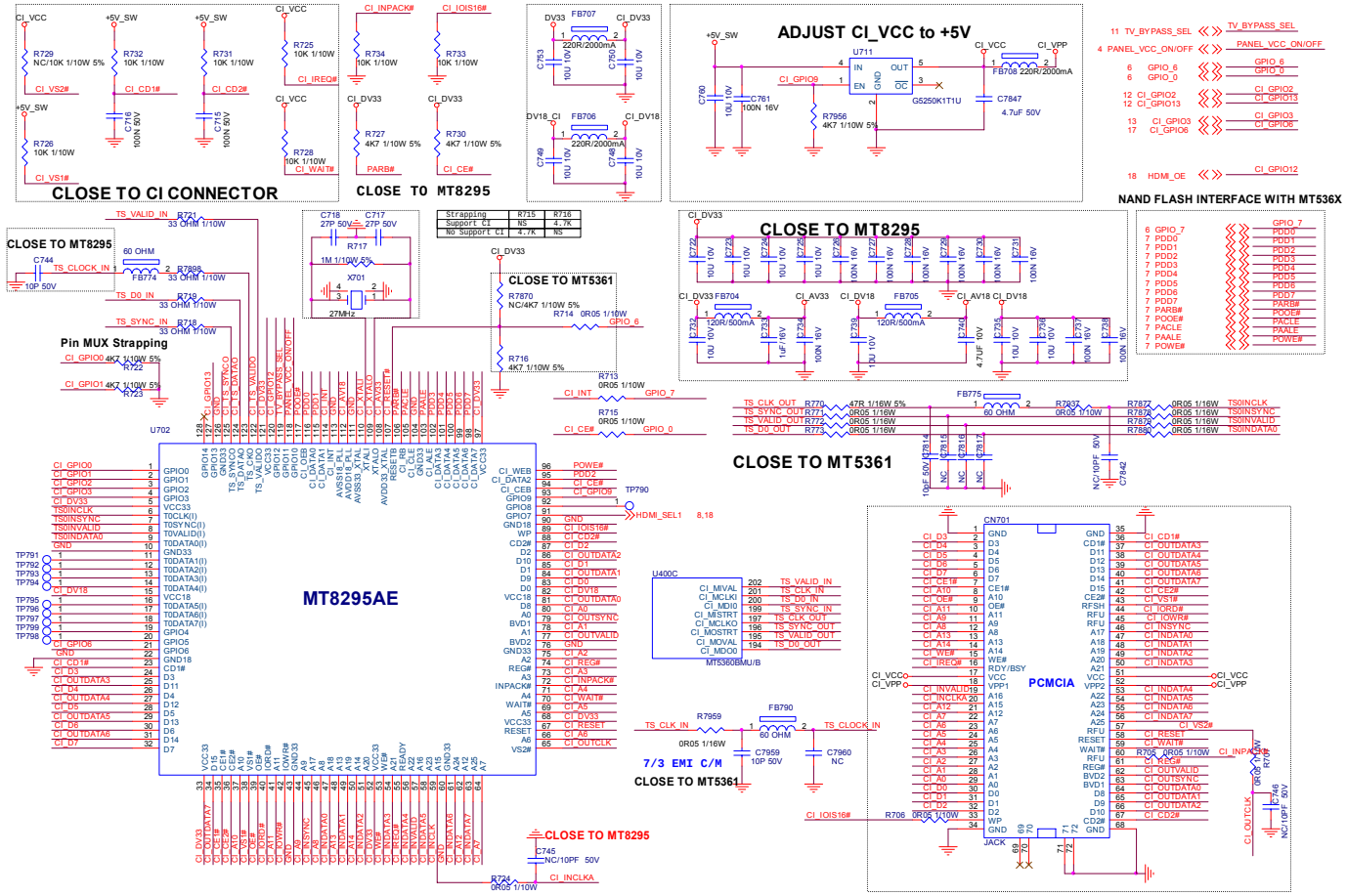

Downloaded from www.Manualslib.com manuals search engine

16) LVDS Output

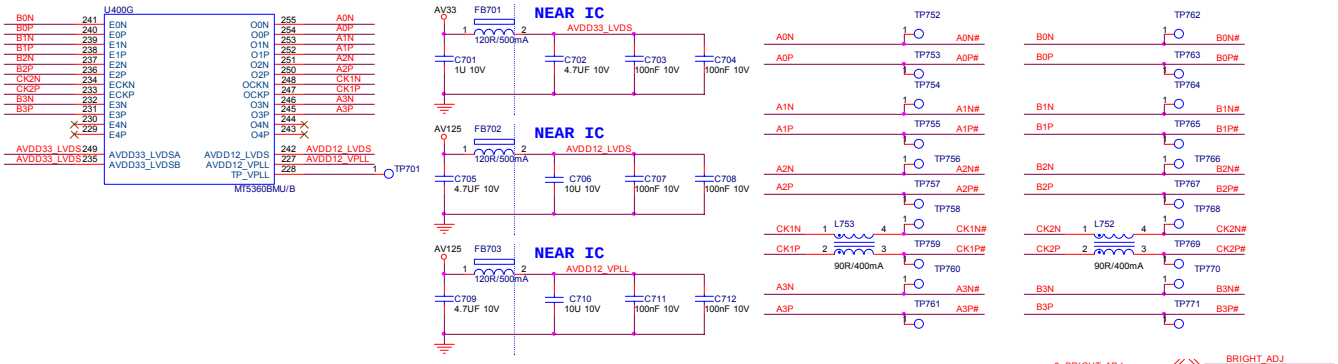

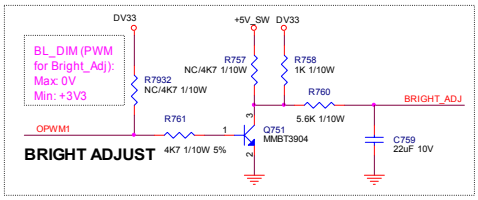

BL CONTROL	R760	R758	C759
PWM CONTROL 19"22"	100R	4K7	N/C
DC CONTROL 26"32"	5K6	1K	22U

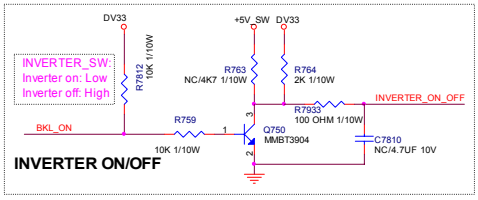

INVERTER ON/OFF	R763	R764
3V3	N/C	2K
5V	4K7	N/C

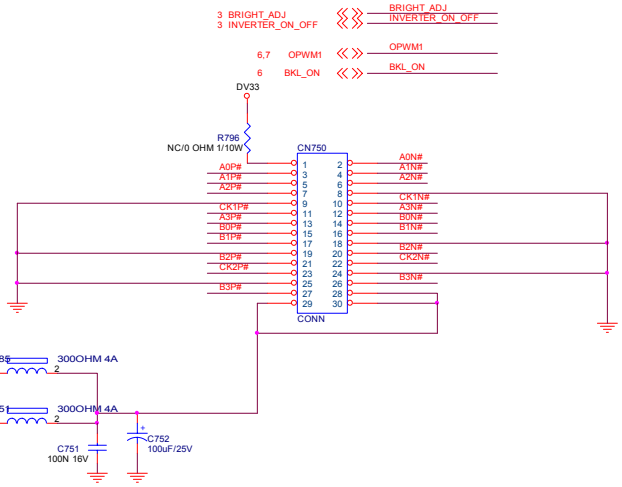

Downloaded from www.Manualslib.com manuals search engine

17) Tuner

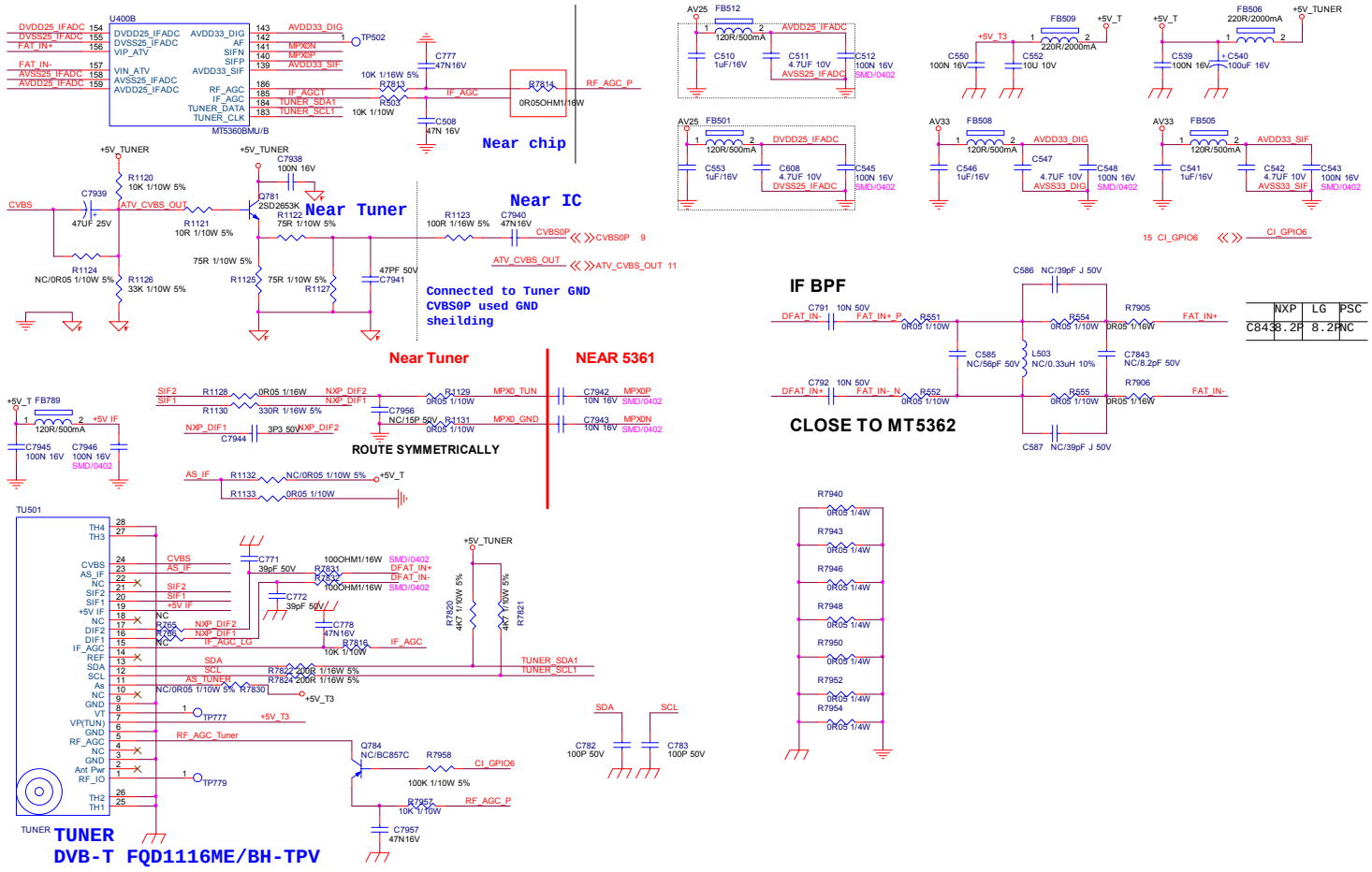

Downloaded from www.Manualslib.com manuals search engine

18) HDMI Switch

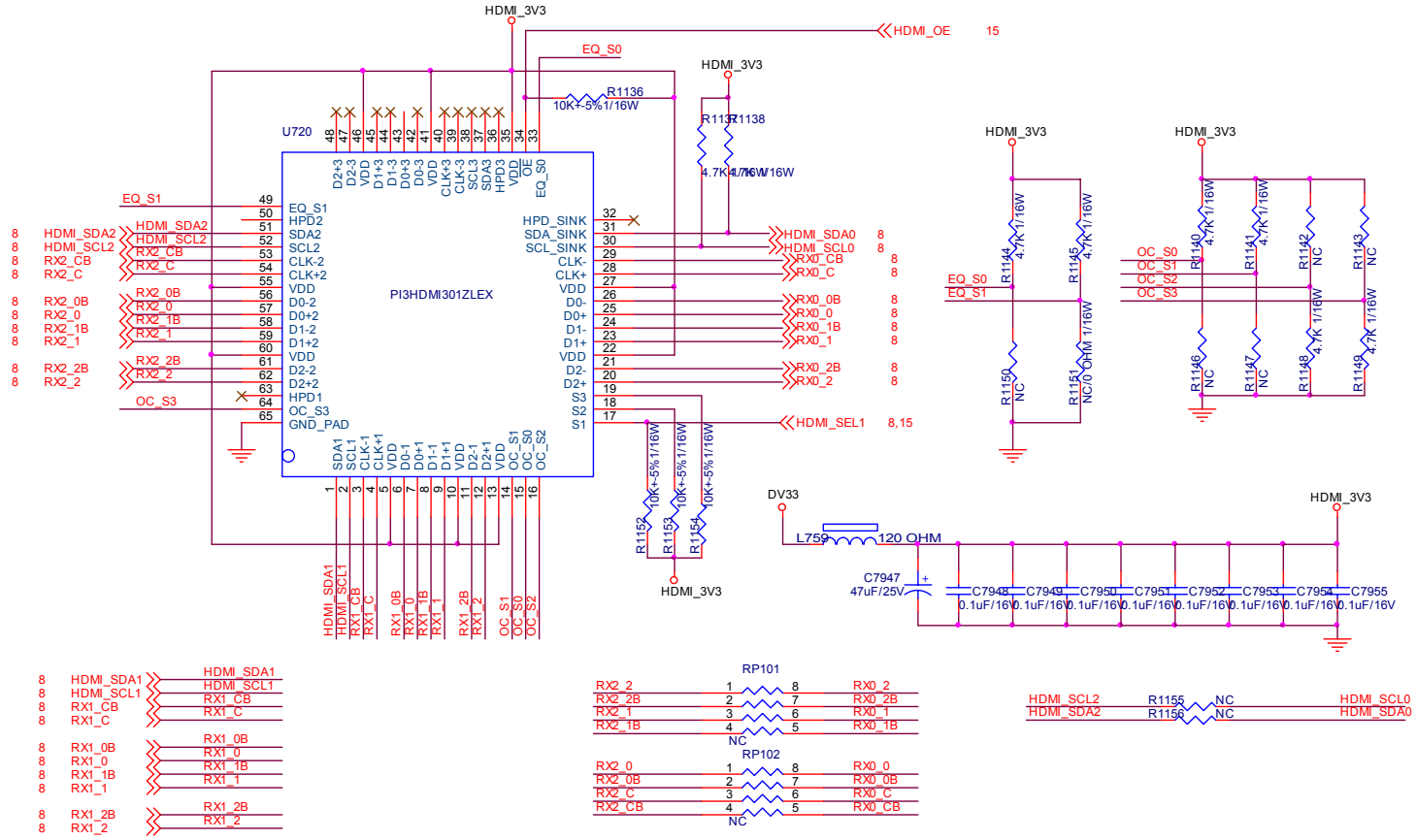

Downloaded from www.Manualslib.com manuals search engine

10.2 Power Board

LT26A1 715G3425P01000003S

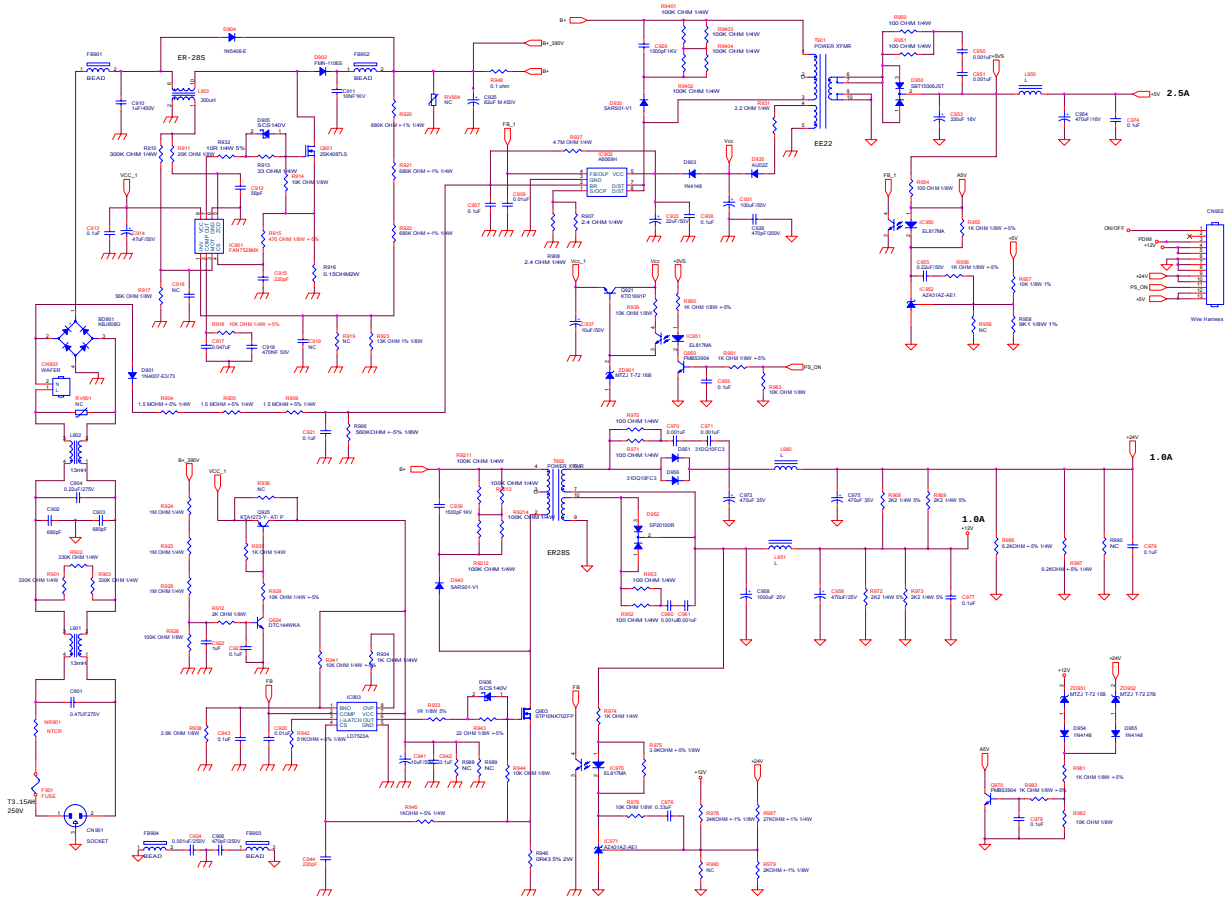
ER-28S
EE22
ER28S
2.5A
1.0A
1.0A
Wire Harness
CN902
ON/OFF
PDIM
+12V
+24V
PS_ON
+5V
CN901
SOCKET
T3.15AH
250V
F901
FUSE
NR901
NTCR
BD901
KBJ806G
D901
1N4007-E3/73
CN903
WAFER
SV901
NC
L902
13mH
L901
13mH
C904
0.22uF/275V
C902
680pF
C903
680pF
R902
330K OHM 1/4W
R901
330K OHM 1/4W
R900
330K OHM 1/4W
C901
0.47UF275V
B+ 390V
VCC_1
B+
IC960
LD7523A
Q904
DTC144WKA
Q905
KSA1220-F-ATI P
Q903
STP10NK70ZFP
Q901
FDH45N50F
Q902
FDH45N50F
Q921
KTD1651P
IC951
EL817MA
IC970
EL817MA
IC371
AZ431AZ-AE1
IC960
AZ431AZ-AE1
IC950
EL817MA
IC962
AZ431AZ-AE1
IC901
FAN7523MX
D930
SARS01-V1
D940
SARS01-V1
D952
SP20100R
D951
SP20100R
D950
SP20100R
D901
MTZJ T-72 16B
ZD901
MTZJ T-72 16B
ZD951
MTZJ T-72 15B
ZD952
MTZJ T-72 27B
D954
1N4148
D955
1N4148
D953
1N4148
D950
SB71506JUST
D935
N4002
D904
1N5408-E
D902
FMN-106S
D905
SCS140V
D906
SCS140V
D903
1N4148
Q906
PMBS3904
Q907
PMBS3904
Q908
PMBS3904
Q909
A6969H
FB901
BEAD
FB902
BEAD
FB904
BEAD
FB903
BEAD
FB
FB_1
ASV
+5V
+12V
+24V
Vcc
Vcc_1
+5VS
PS_ON
B+
T901
POWER XFMR
T902
POWER XFMR
L950
L
L980
L
L951
L
L902
L901
C944
220pF
C946
0.33uF
C945
1uF
C941
0.47uF/25V
C942
1uF
C943
0.1uF
C920
0.01uF
C921
0.1uF
C922
1uF
C923
0.1uF
C924
0.56uF/250V
C925
4700pF/250V
C926
4700pF/250V
C910
1uF/450V
C913
0.1uF
C914
47uF/50V
C912
56pF
C915
220pF
C916
NC
C917
0.047uF
C918
470NF 50V
C919
NC
C907
0.1uF
C908
0.01uF
C909
0.01uF
C933
22uF/50V
C968
0.1uF
C931
100uF/50V
C938
470pF/250V
C937
10uF/50V
C956
0.1uF
C963
10K OHM 1/8W
C952
0.22uF/50V
C962
0.22uF/50V
C961
0.22uF/50V
C951
0.01uF
C950
0.001uF+5VS
C953
330uF 16V
C954
470uF/16V
C924
0.1uF
C929
1500pF/1KV
C939
1500pF/1KV
C948
0.1 ohm
C949
NC
C902
52uF M 450V
C911
10NF/1KV
C960
0.001uF/0.001uF
C961
0.001uF/0.001uF
C970
0.001uF
C971
0.001uF
C973
470uF 35V
C975
470uF 35V
C959
470uF/25V
C972
2K2 1/4W 5%
C973
2K2 1/4W 5%
C977
0.1uF
C958
1000uF 25V
C979
0.1uF
C978
0.1uF
C975
PMBS3904
C976
0.33uF
R901
R902
R903
R904
R905
R906
R907
R908
R909
R910
R911
R912
R913
R914
R915
R916
R917
R918
R919
R920
R921
R922
R923
R924
R925
R926
R927
R928
R929
R930
R931
R932
R933
R934
R935
R936
R937
R938
R939
R940

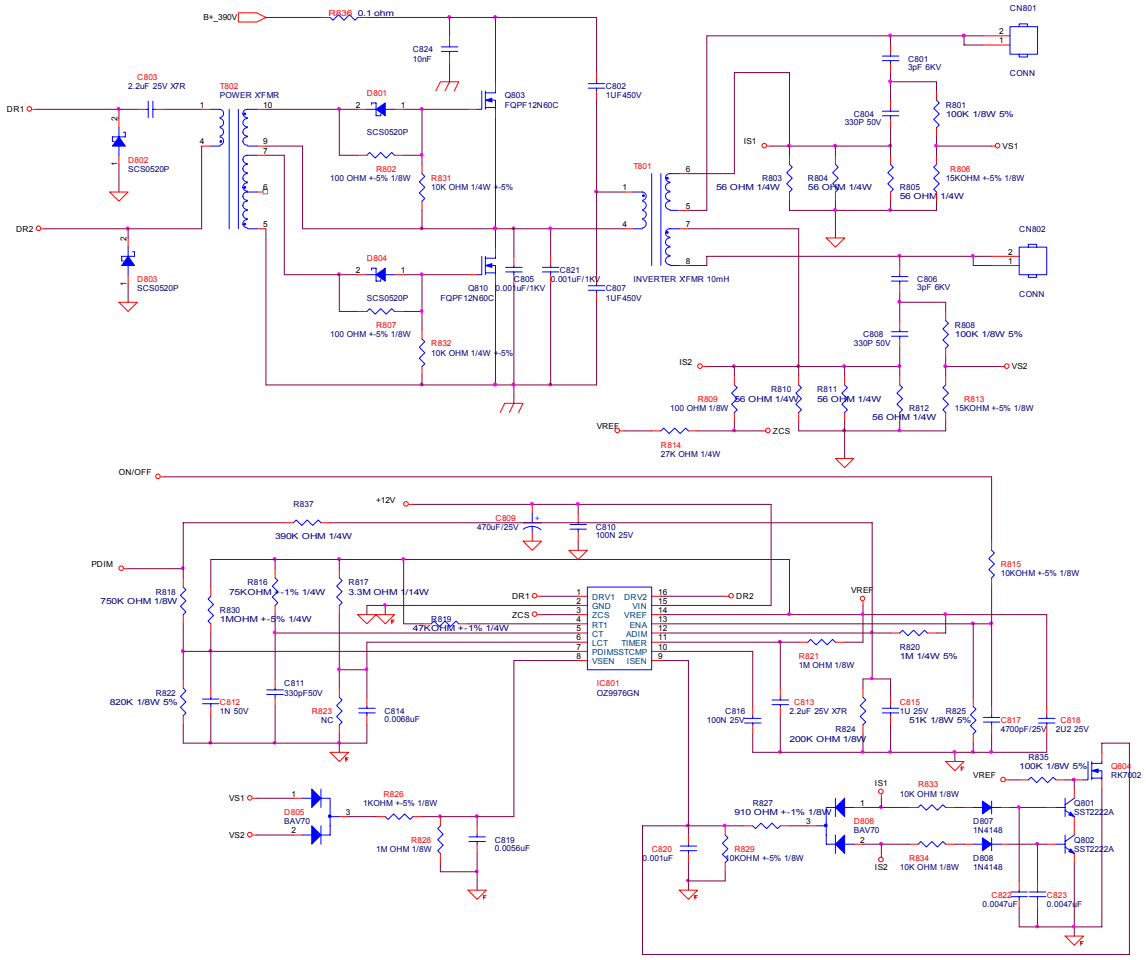

Downloaded from www.Manualslib.com manuals search engine

LT32A1 E32AG2NB3WH72N 715G3234P01H30003M

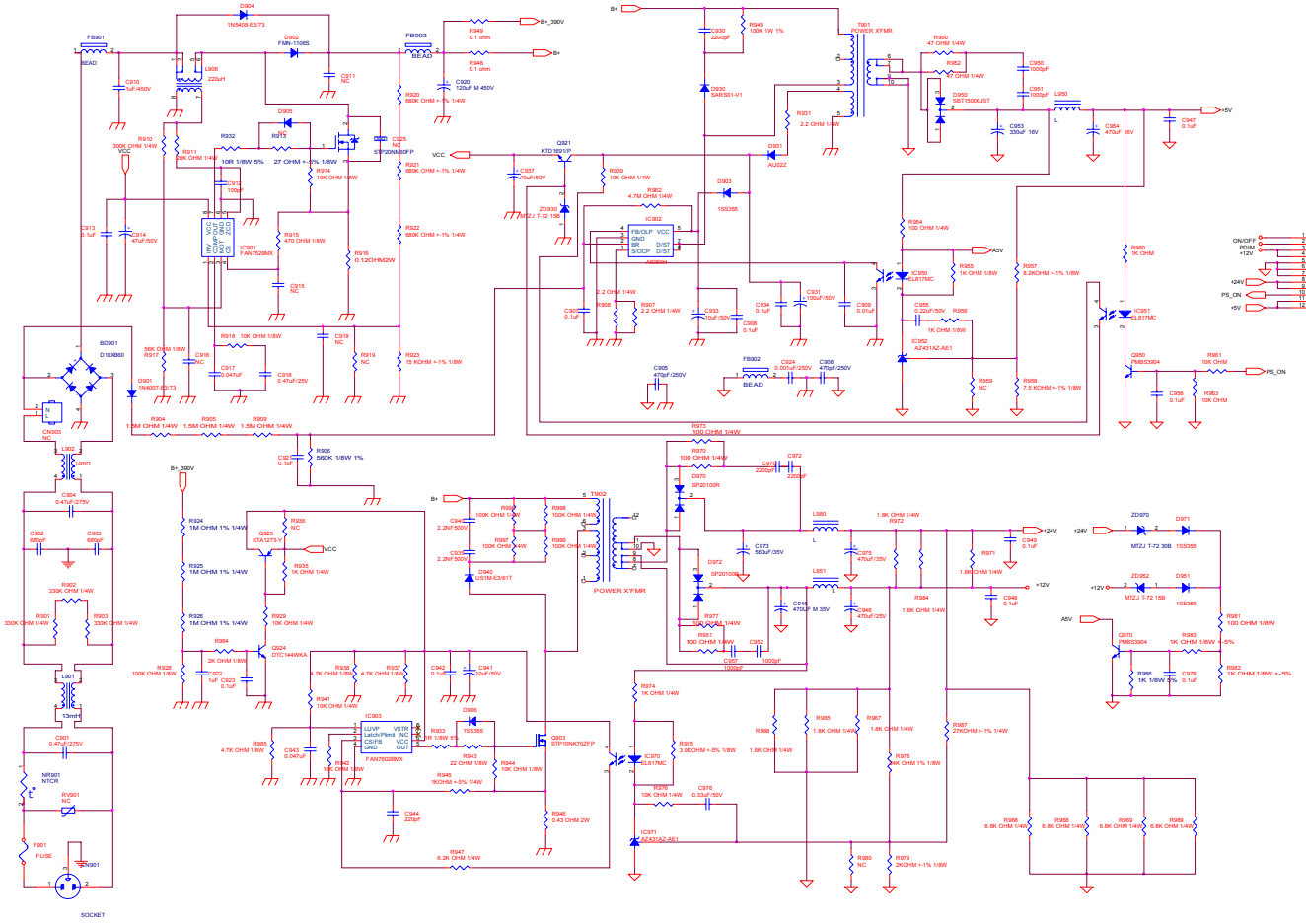

Downloaded from www.Manualslib.com manuals search engine

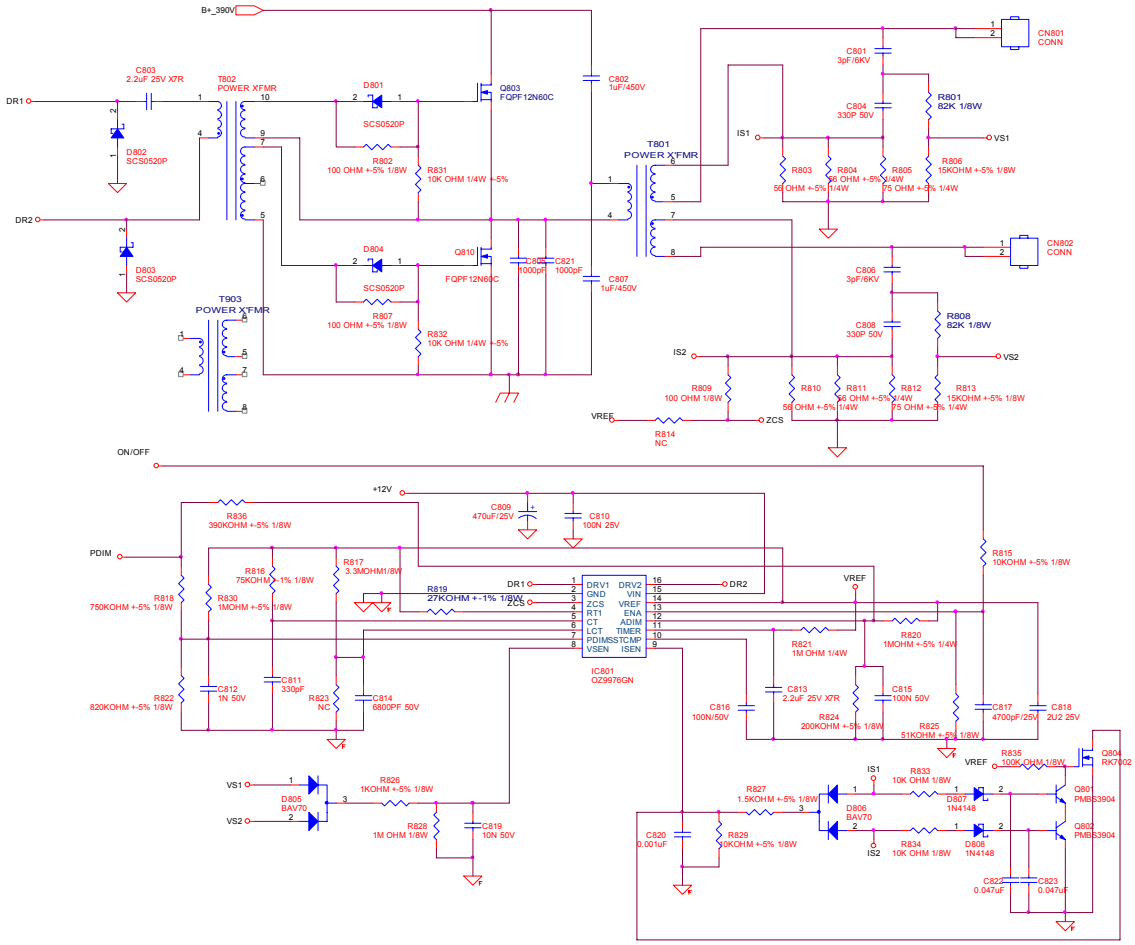

Downloaded from www.Manualslib.com manuals search engine

LT32A1 E32AA2NB3WH72N 715G3332 1

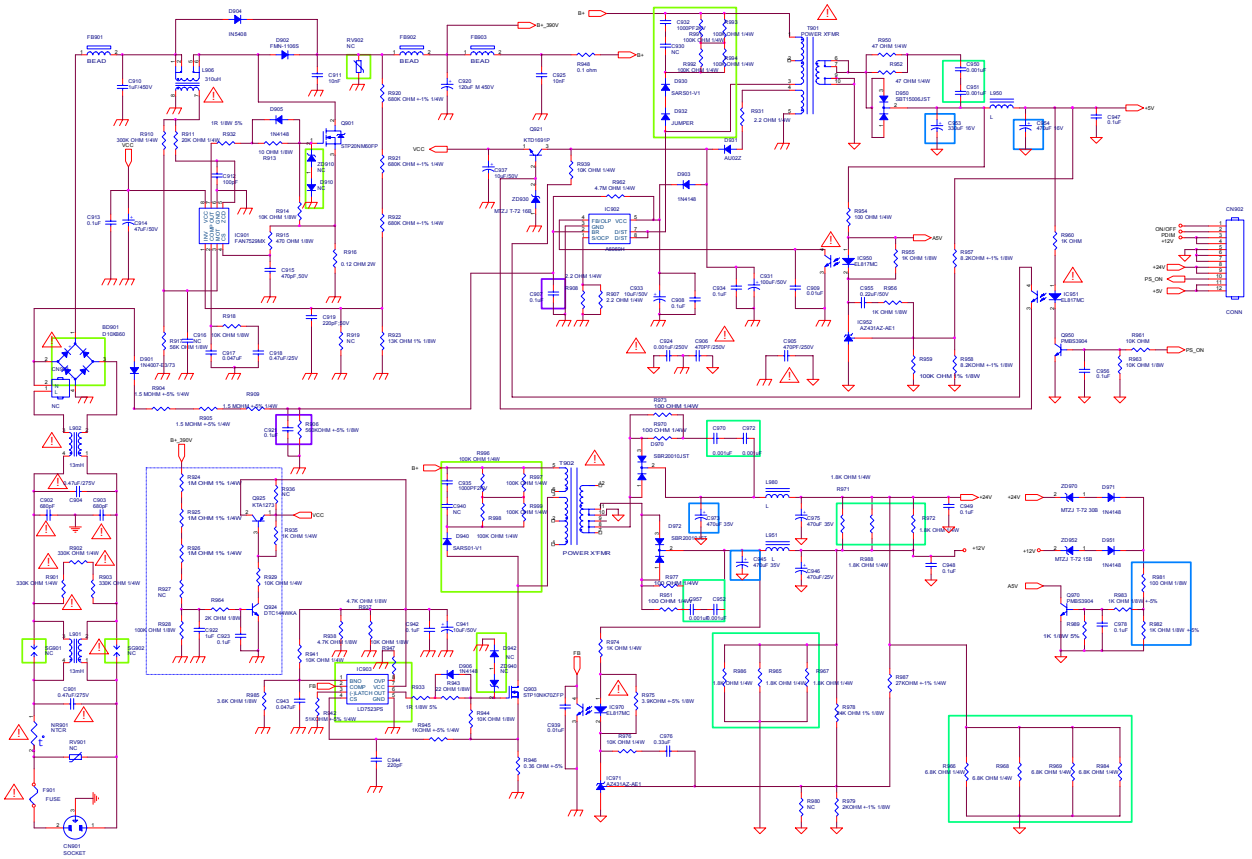

Downloaded from www.Manualslib.com manuals search engine

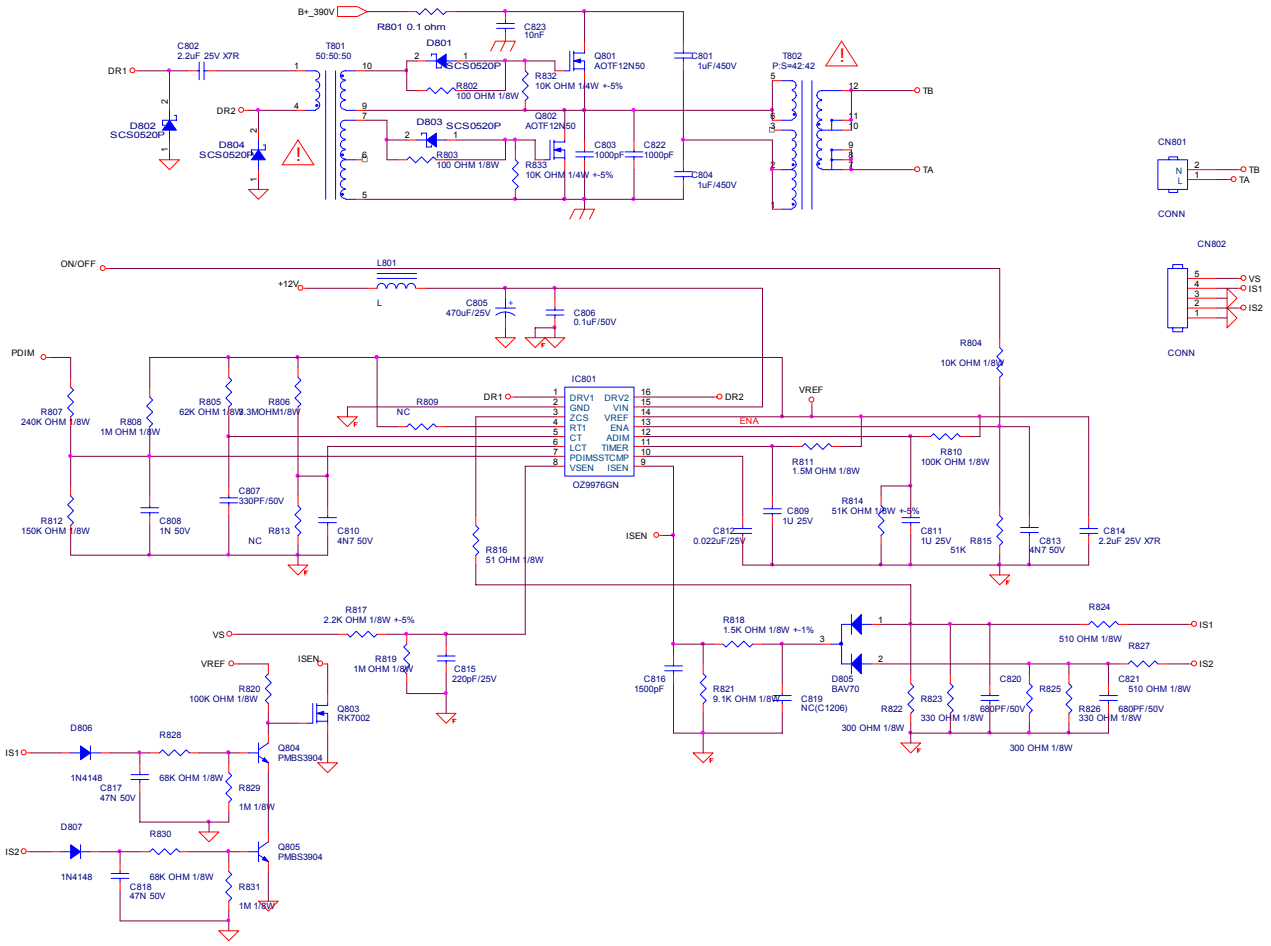

Downloaded from www.Manualslib.com manuals search engine

LT32A1 E32AA2NB3WH72N 715G3645P01W30003S

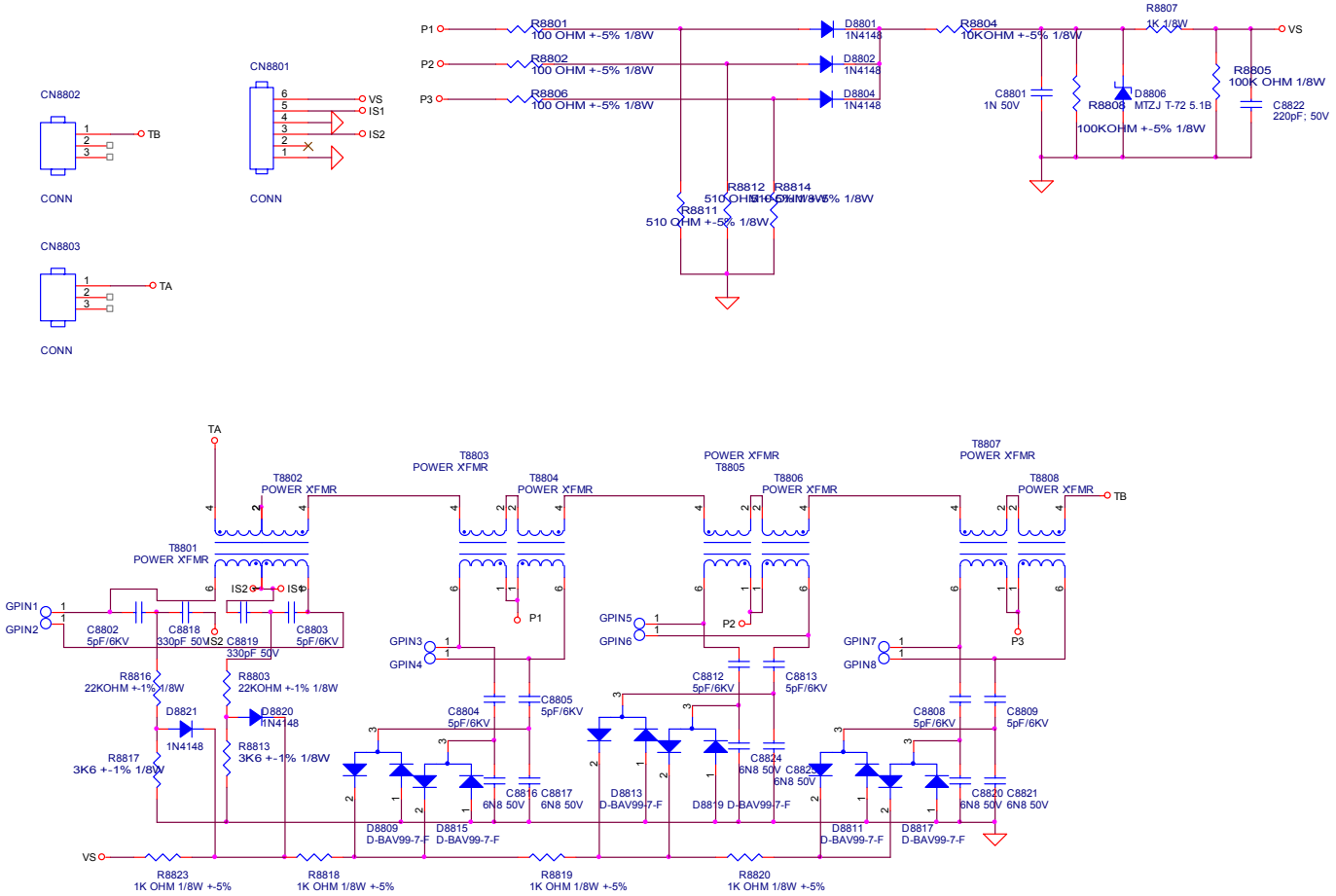

Downloaded from www.Manualslib.com manuals search engine

10.3 Key Board
715G3293K01001004S

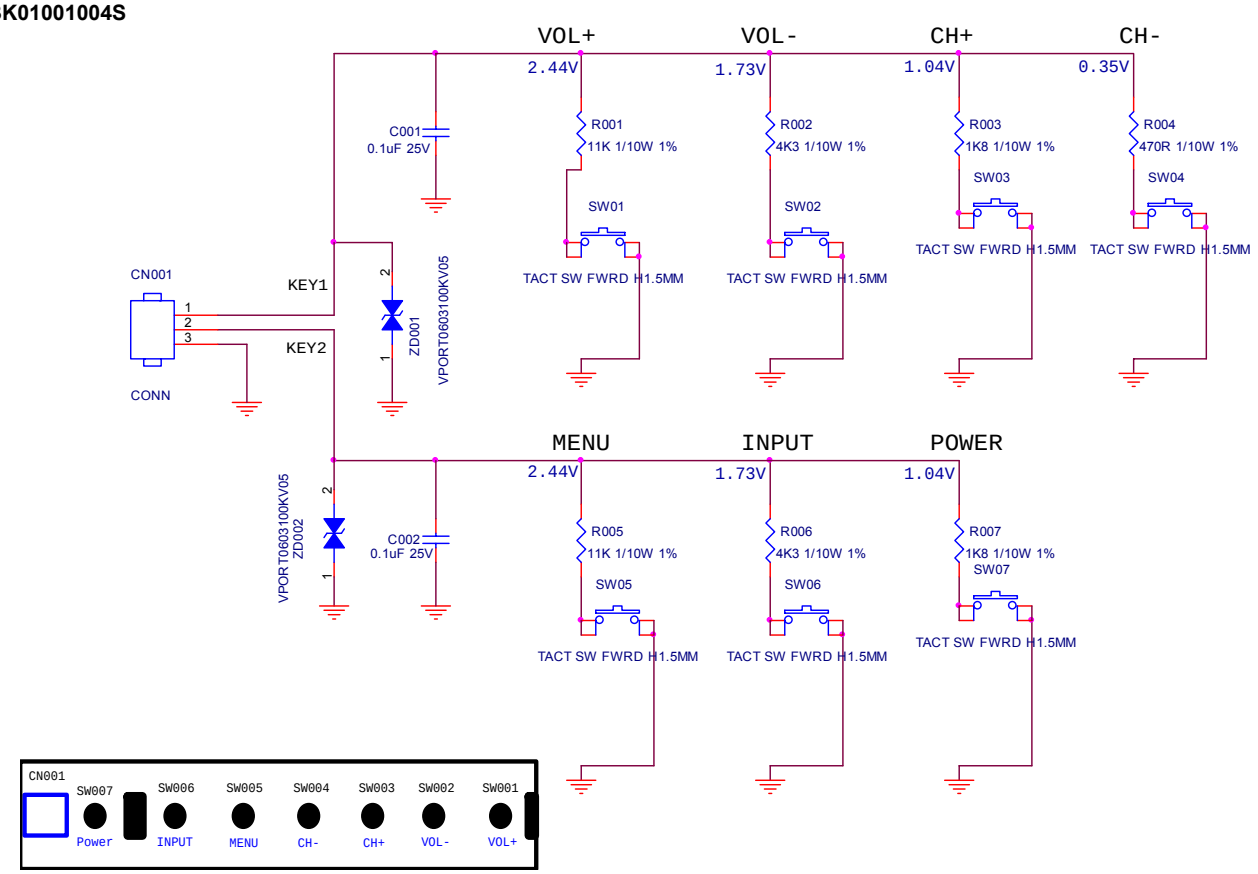

Downloaded from www.Manualslib.com manuals search engine

10.4 IR Board

LT26A1 715G3870R01000004M

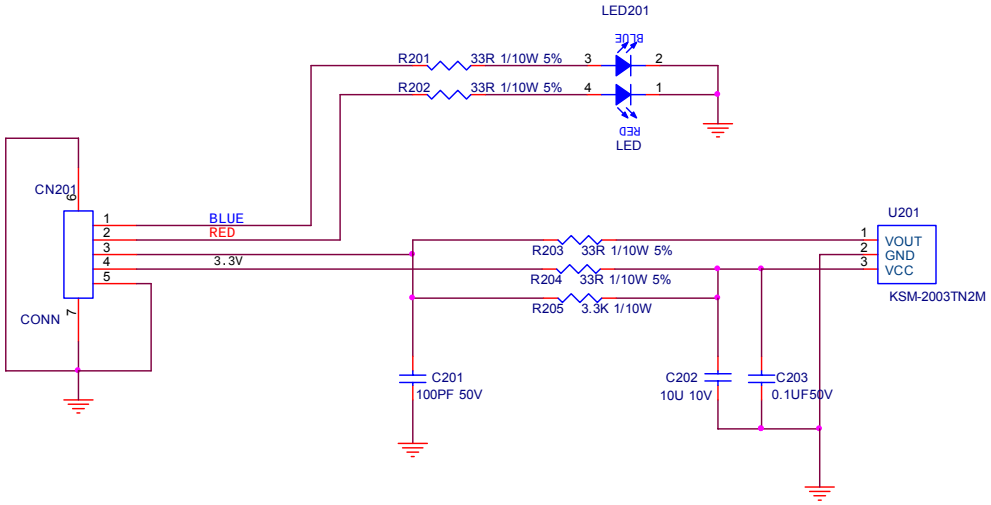

Downloaded from www.Manualslib.com manuals search engine

LT32A1 715G3478R01001004S

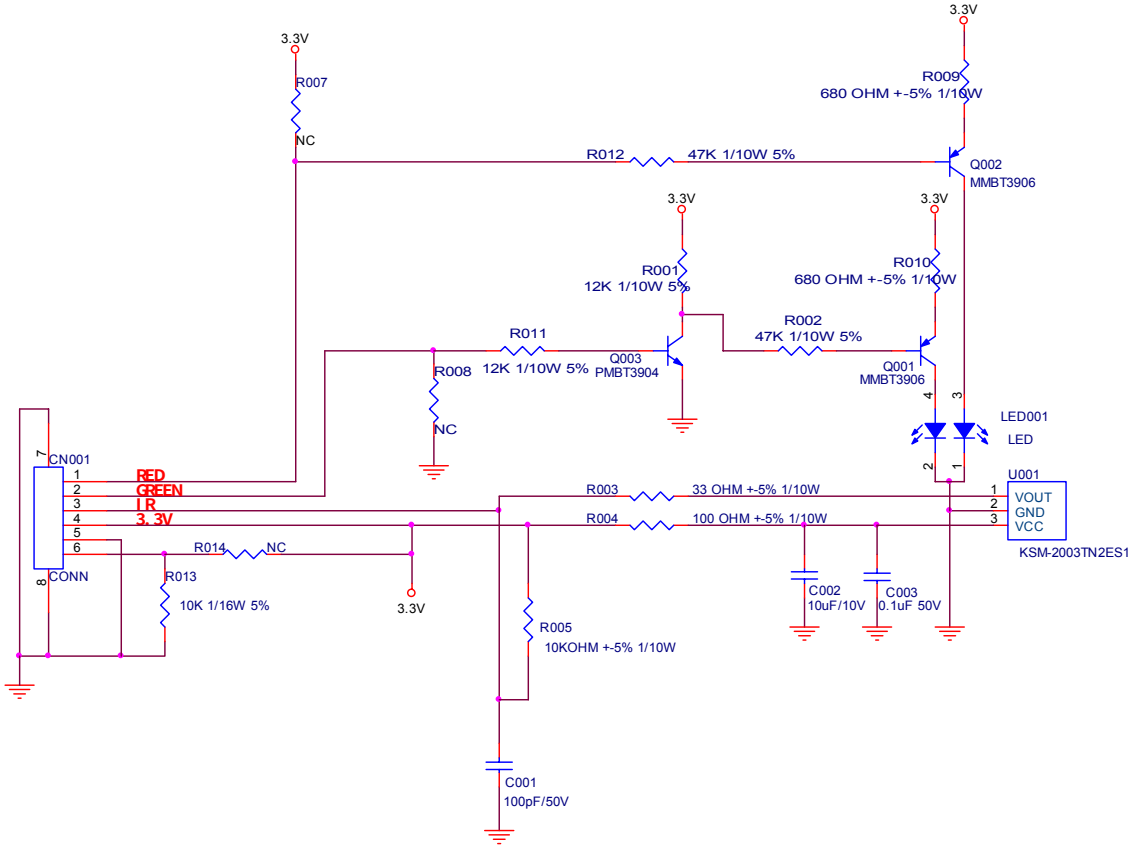

Downloaded from www.Manualslib.com manuals search engine

11. Exploded View

LT26A1

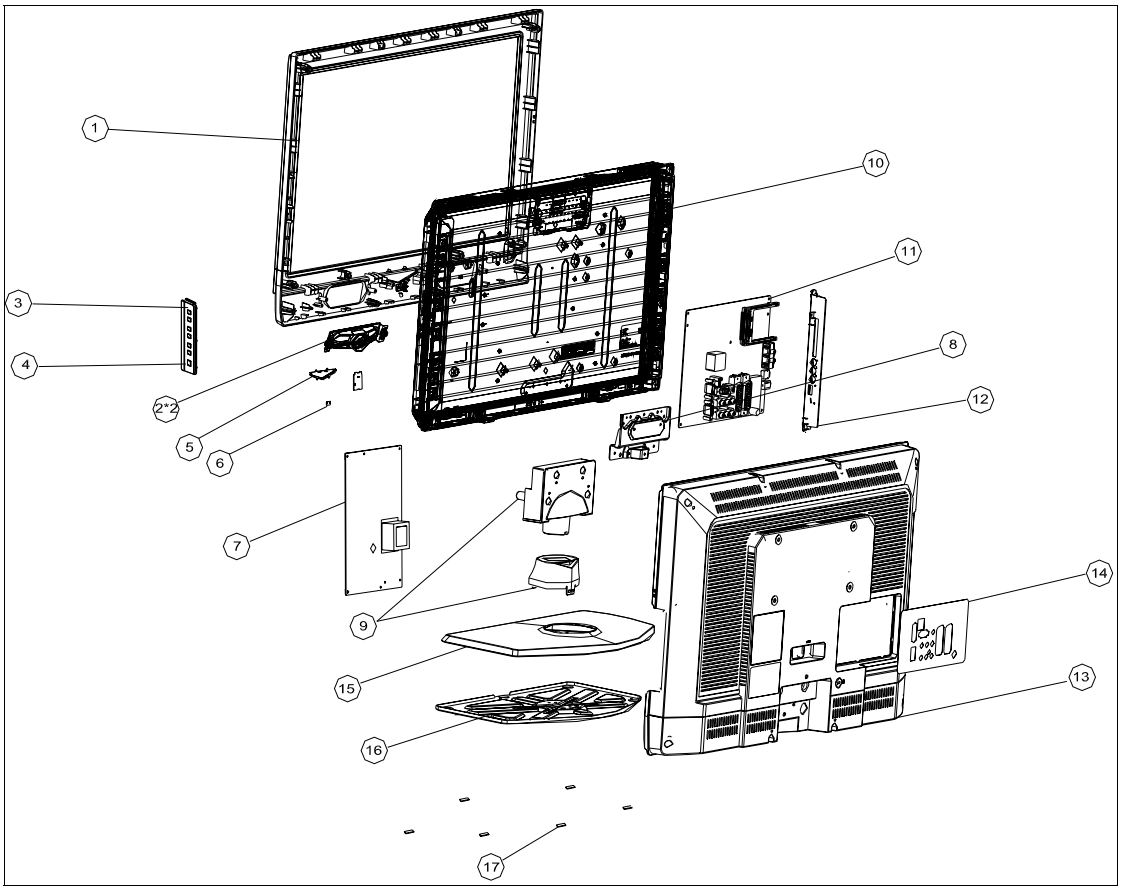

Downloaded from www.Manualslib.com manuals search engine

LT32A1

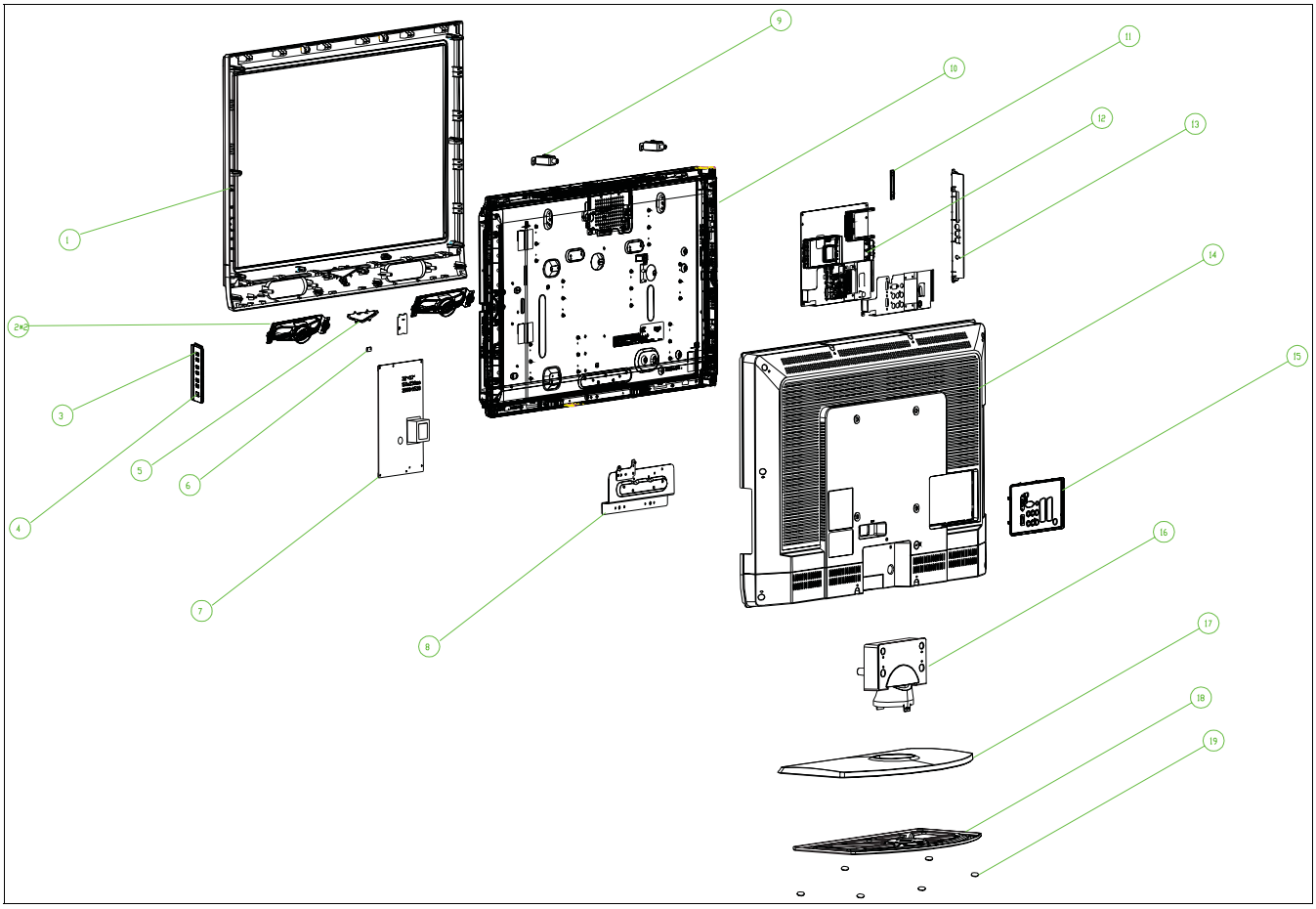

Downloaded from www.Manualslib.com manuals search engine

Parts List			
No.	**Part No.**	**Description**	**Q'ty**
1	A34T1058 GMC1L0130	BEZEL	1
2	078T 521 1 Y	SPEAKER	1
3	A33T0536 GME1L0100	KEY HOLDER	1
4	A33T0537 QV 1L0100	KEY PAD	1
5	A33T0552 ED 1C0100	LENS IR	1
6	A33T0563 1 1C0100	POWER LENS	1
7	PWTV9G61GQKA	POWER BOARD	1
8	A15T0650201CKD	BKT-BASE-SUPPORT	1
9	Q37T0135012	HINGE ASSY	1
10	750TVG260XEB11N000	PANEL	1
11	756TQACB 2B004 01	MAIN BOARD	1
12	A34T1610 GM 1L0130	COVER IO SIDE	1
13	A34T1018 GM 2L0130	REAR COVER	1
14	A34T1612 GM 1L0100	COVER IO SIDE	1
15	A34T1059 GM 1L0100	BASE FOR	1
16	A15T0649201	BASE BKT	1
17	Q12G6082 1	FOOT PAD	6

Screws List			
No.	**Part No.**	**Description**	**Q'ty**
1	0M1G 130 6120	SCREW FOR BKT-SIDE AND PANEL	1
2	0M1G 140 8225 CR3	SCREW FOR BKT-SIDE AND REAR COVER	1
3	0M1G 930 8 47 CR3	SCREW FOR COVER IO SIDE	2
4	0M1G 940 6120	SCREW FOR BRACKET_VESA_LGD AND PANEL	2
5	0M1G 940 6120	SCREW FOR HINGE AND PANEL	5
6	0M1G 940 12 47 CR3	SCREW FOR HINGE AND PANEL	2
7	0M1G1730 8120	SCREW FOR MAIN AND POWER BOARD	9
8	0Q1G 340 12 47 CR3	SCREW FOR BEZEL AND REAR COVER	8
9	0Q1G 930 8 47 CR3	SCREW FOR COVER IO SIDE	1
10	0Q1G 930 8 47 CR3	SCREW FOR MAIN BOARD AND SHIELD	4
11	0Q1G 930 8 47 CR3	SCREW FOR SHIELD-IO	2
12	0Q1G 940 12 47 CR3	SCREW FOR PANEL AND BEZEL	4
13	0Q1G 940 14 47 CR3	SCREW FOR BASE/STAND*4; REAR COVER/BKT-BASE-SUPPORT*2	6
14	001G6021 1	SCREW FOR SPEAKER	4
15	0Q1G1830 6120	SCREW FOR IR BOARD	1
16	0Q1G3030 6 47 CR3	SCREW FOR KEY BOARD	2
17	0Q1G 130 6120	SCREW FOR BASE AND BASE BKT	6

Downloaded from www.Manualslib.com manuals search engine

LT32A1

Parts List			
No.	**Part No.**	**Description**	**Q'ty**
1	A34T1050 GMA1L0130	BEZEL	1
2	078G 522 1B Y	SPK	1
3	A33T0536 GME1L0100	KEY HOLDER	1
4	A33T0537 QV 1L0100	KEY PAD	1
5	A33T0562 ED 1C0100	IR LENS	1
6	A33T0563 1 1C0100	POWER LENS	1
7	PWTV9NE1GQN6	POWER BOARD	1
8	A15T0560101CKD	TV-BASE-SUPPORT	1
9	A15T0559101CKD	TV-VESA-BKT	1
10	750TVG320EBC12N000	PANEL	1
11	Q15T0713101CKD	BKT_MPCB_SUPPOT_R	1
12	756TQACB 2B005 01	MAIN BOARD	1
13	A34T1610 GM 1L0130	COVER IO SIDE	1
14	A34T0974 GM 2A0130	REAR COVER	1
15	A34T1612 GM 1A0130	COVER IO BACK	1
16	Q37T0134011	HINGE	1
17	A34T1051 GM 1L0100	BASE	1
18	A15T0643101	TV BKT_BASE	1
19	Q12G6300 25 1	RUBBER FOOT	6

Screws List			
No.	**Part No.**	**Description**	**Q'ty**
1	0M1G 940 6120	BASE SUPPORT/PANEL*5 PANEL/VESA *4	9
2	0Q1G 130 8 47 CR3	BASE BKT / BASE*6	6
3	0M1G 930 8 47 CR3	BACK COVER IO/MAIN BOARD*2	2
4	0M1G1730 6120	POWER BOARD/PANEL*5 MAIN BOARD/PANEL*5	10
5	0M1G 940 12 47 CR3	HINGE/BACK COVER*2	2
6	0M1G1740 10120	HINGE BKT/PANEL*2	2
7	0Q1G 930 8 47 CR3	MAIN BOARD*4 MIAN BOARD/BACK COVER*1 SIDE COVER/MAIN BOARD*2	7
8	0Q1G 930 6120	KEY HOLDER/KEY BOARD*2	2
9	0Q1G 940 16 47 CR3	BEZEL/BACK COVER*12	12
10	Q01G6070 1	SPK/BEZEL*4 PANEL/BEZEL*2	6
11	0Q1G1030 6120	IR BOARD/BEZEL*1	1
12	0M1G1730 10120	POWER BOARD/AC SOCKET	1
13	0Q1G 940 12 47 CR3	BASE BKT/HINGE*4 PANEL/BEZEL*2	6

Downloaded from www.Manualslib.com manuals search engine

12. BOM List

Note: The parts information listed below are for reference only, and are subject to change without notice. Please go to http://cs.tpv.com.cn/hello1.asp for the latest information.

LT26A1 E26AG2NB3WH72N

Location	Part No.	Description	Remark
	052G 1150522	PAPER TAPE	
	052G 1185	MIDDLE TAPE (Y1200141)	
	052G 2191 A	PAPER TAPE	
	A34T1610 GM 1L0130	COVER IO SIDE-26/32	
	PWTV9G61GQKA	POWER BOARD	
	040G 45762412B	CBPC LABEL	
GND	009G6005 1 GP	GROUND TERMINAL	
CN801	033G8021 2E U	INVERT CONNECTOR	
CN802	033G8021 2E U	INVERT CONNECTOR	
CN801	033G8021 2E XY	CONNECTOR	
CN802	033G8021 2E XY	CONNECTOR	
	051G 6 4503	GLUE_RTV	
IC970	056G 139 7 1	IC EL817MA M-TYPE	
IC951	056G 139 7 1	IC EL817MA M-TYPE	
IC950	056G 139 7 1	IC EL817MA M-TYPE	
IC950	056G 139 3A	IC PC123Y22FZ0F	
IC951	056G 139 3A	IC PC123Y22FZ0F	
IC970	056G 139 3A	IC PC123Y22FZ0F	
IC902	056T 379121	IC STR- A6069H DIP-8	
Q921	057G 761 7	KTD1691P	
Q921	057G 761502	TAR BTD1805AD3 BY CYSTEK	
NR901	061G 58030 W	NTCR 3 欧 5A	
C904	063G 10722410M	0.22 UF 275VAC	
C901	063G 10747410V	0.47UF 275VAC ARCO	
C910	063G213J105GFA	MPF CAP	
C802	063T213J105GCC	CAP MPE 1UF J 450V	
C807	063T213J105GCC	CAP MPE 1UF J 450V	
C805	065G 1K1021AT	CK45-R3AD102K-NR 1000PF / 1KV R-TYPE P	
C821	065G 1K1021AT	CK45-R3AD102K-NR 1000PF / 1KV R-TYPE P	
C824	065G 1K103 2E6213	CAP CER 10NF K 1KV	
C911	065G 1K103 2E6921	CAP CER 10NF K 1KV Y5U	
C801	065G 6J3096ET	CER CAP 3PF J 6KV	
C806	065G 6J3096ET	CER CAP 3PF J 6KV	
C906	065G306K4712B3	Y1 CAP 470PF +-10% 250VAC CD SERIES	
C926	065G306K4712B3	Y1 CAP 470PF +-10% 250VAC CD SERIES	
C902	065G306K6812BM	Y1 CAP 680PF 10% 250VAC KX	
C903	065G306K6812BM	Y1 CAP 680PF 10% 250VAC KX	
C924	065G306M1022B2	1000PF 400VAC/250VAC Y1	
C925	067G 42Z82015K	EC 82UF M 450V 18*36MM	
C953	067G204V331 3K	CS CAP 330UF 16V 10*12 MM	
C809	067G215D4714KV	E.C 105℃ CAP 470UF M 25V ED SERIES	
C958	067G215P1024KV	LOW ESR EC 1000UF M 25V 12.5*20MM	
C954	067G215P4713KV	LOW ESR EC 471UF M 16V 10*12MM	
C959	067G215P4714KV	LOW ESR EC 470UF M 25V 10*16MM	
C973	067G215P4716KV	LOW ESR EC 470UF M 35V 10*20MM	
C975	067G215P4716KV	LOW ESR EC 470UF M 35V 10*20MM	

Downloaded from www.Manualslib.com manuals search engine

FB901	071G 55 21	FERRITE BEAD	
L902	073G 174106 L	LINE FILTER 13MH LF-1008108	
L901	073G 174106 L	LINE FILTER 13MH LF-1008108	
L950	073G 253 91 L	CHOKE BY LI TA	
L951	073G 253 91 L	CHOKE BY LI TA	
L980	073G 253 91 L	CHOKE BY LI TA	
L903	073T 174124 N	PFC CHOKE 300UH	
T902	080GL26T 11 N	X'FMR 680UH YUVA-1091	
T802	080GL26T 15 N	X'FMR 840UH MIN YUVA-1094	
T801	080GL26T 16 YS	INVERTER X'FMR 10MH YS04170400	
T901	080GL52T 5 N	X'FMR 1.0MH YUVA-1068	
F901	084T 41 15 L	FUSE 3.15A 250V	
CN901	087G 501 48 S	AC SOCKET 3PIN + 3 HOLE	
D904	093G 52 70	DIODE 1N5408-P 3A/1000V DO-201AD	
D951	093G 60335	DIODE SR515 5A/150V DO-201AD	
D956	093G 60335	DIODE SR515 5A/150V DO-201AD	
D956	093G3010 1 1	SIODE 31DQ10FC3	
D951	093G3010 1 1	SIODE 31DQ10FC3	
CN902	095G 82513D923	HARNESS 13P(SCN) - 12P 140MM FQE092181HY	
CN902	095G 82513X923	HARNESS 13P(SCN) - 12P 140MM LCDXXTF0267	2nd source
	0Q1G 140 8120 GP	T4*8 SCREW	
	705TQ857054	Q901 ASS'Y	
	051G 200 1	OIL FOR DISAPPEAR	
Q901	057G 667 55	FET 2SK4087LS 14A/600V TO-220FI(LS)	
	0M1G1730 8120	SCREW	
HS2	Q90G6241 1 GP	HEAT SINK	
	705TQ857055	Q803/Q810 ASS'Y	
	051G 200 1	OIL FOR DISAPPEAR	
Q803	057G 667 49	FET 2SK4086LS 11.5A/600V TO-220FI(LS)	
Q810	057G 667 49	FET 2SK4086LS 11.5A/600V TO-220FI(LS)	
Q803	057T 667 59	MOSFET FQPF12N60C 12A/600V TO-220F	
Q810	057T 667 59	MOSFET FQPF12N60C 12A/600V TO-220F	
	0M1G1730 8120	SCREW	
HS4	Q90T0001 3	HEAT SINK	
	705TQ857056	Q903 ASS'Y	
	051G 200 1	OIL FOR DISAPPEAR	
Q903	057G 667 21	STP10NK70ZFP	
	090G6084 1	HEAT SINK	
	0M1G1730 8120	SCREW	
	705TQ893063	D902 ASS'Y	
	051G 200 1	OIL FOR DISAPPEAR	
	090G6084 1	HEAT SINK	
D902	093G 52 56	DIODE FMN-1106S 10A/600V TO-220	
	0M1G1730 8120	SCREW	
	705TQ893064	D950 ASS'Y	
	051G 200 1	OIL FOR DISAPPEAR	
	090G6084 1	HEAT SINK	
D950	093G 60298	DIODE SBT15006JST 15A/60V TO-220ML(LS)	
D950	093G1506 2	FMW-2156	
	0M1G1730 8120	SCREW	
	705TQ893065	BD901 ASS'Y	
	051G 200 1	OIL FOR DISAPPEAR	
	090G6064 1	HEAT SINK	
BD901	093G 50460 34	BRIDGE KBJ608G 6A/800V KBJ	

Downloaded from www.Manualslib.com manuals search engine

	0M1G1730 8120	SCREW	
	705TQ893066	D952 ASS'Y	
	051G 200 1	OIL FOR DISAPPEAR	
	090G6084 1	HEAT SINK	
D952	093G 60282	DIODE SP20100R TO-220FP	
D952	093G 60300	DIODE SBR20010JST 20A/100V TO-220ML(LS)	
	0M1G1730 8120	SCREW	
IC901	056G 368 12	IC FAN7529MX SOP-8	
IC801	056T 379122	IC OZ9976GN-C-0-TR SOP-16	
IC903	056T 379133	IC LD7523A GS SOP-8	
Q950	057G 417 4	PMBS3904/PHILIPS-SMT(04)	
Q970	057G 417 4	PMBS3904/PHILIPS-SMT(04)	
Q804	057G 759 2	RK7002FD5T116 SOT-23 BY ROHM	
Q924	057G 760 5	DTC144WKA BY ROHM SMT	
Q801	057G 761 18 T	TRA SST2222A SST3 ROHM	
Q802	057G 761 18 T	TRA SST2222A SST3 ROHM	
R957	061G0805100 2F	RST CHIPR 10KOHM +-1% 1/8W	
R802	061G0805101	1ST CHIPR 100 OHM +-5% 1/8W	
R807	061G0805101	1ST CHIPR 100 OHM +-5% 1/8W	
R809	061G0805101	1ST CHIPR 100 OHM +-5% 1/8W	
R954	061G0805101	1ST CHIPR 100 OHM +-5% 1/8W	
R826	061G0805102	RST CHIPR 1K OHM +-5% 1/8W	
R955	061G0805102	RST CHIPR 1K OHM +-5% 1/8W	
R956	061G0805102	RST CHIPR 1K OHM +-5% 1/8W	
R960	061G0805102	RST CHIPR 1K OHM +-5% 1/8W	
R961	061G0805102	RST CHIPR 1K OHM +-5% 1/8W	
R983	061G0805102	RST CHIPR 1K OHM +-5% 1/8W	
R981	061G0805102	RST CHIPR 1K OHM +-5% 1/8W	
R982	061G0805103	RST CHIPR 10K OHM +-5% 1/8W	
R976	061G0805103	RST CHIPR 10K OHM +-5% 1/8W	
R963	061G0805103	RST CHIPR 10K OHM +-5% 1/8W	
R944	061G0805103	RST CHIPR 10K OHM +-5% 1/8W	
R939	061G0805103	RST CHIPR 10K OHM +-5% 1/8W	
R914	061G0805103	RST CHIPR 10K OHM +-5% 1/8W	
R815	061G0805103	RST CHIPR 10K OHM +-5% 1/8W	
R833	061G0805103	RST CHIPR 10K OHM +-5% 1/8W	
R834	061G0805103	RST CHIPR 10K OHM +-5% 1/8W	
R835	061G0805104	RST CHIPR 100K OHM +-5% 1/8W	
R928	061G0805104	RST CHIPR 100K OHM +-5% 1/8W	
R808	061G0805104	RST CHIPR 100K OHM +-5% 1/8W	
R801	061G0805104	RST CHIPR 100K OHM +-5% 1/8W	
R828	061G0805105	RST CHIPR 1M OHM +-5% 1/8W	
R821	061G0805105	RST CHIPR 1M OHM +-5% 1/8W	
R933	061G0805109	RST CHIPR 1 OHM +-5% 1/8W	
R923	061G0805130 2F	RST CHIP 13K 1/8W 1%	
R806	061G0805153	RST CHIPR 15KOHM +-5% 1/8W	
R813	061G0805153	RST CHIPR 15KOHM +-5% 1/8W	
R979	061G0805200 1F	RST CHIPR 2 KOHM +-1% 1/8W	
R912	061G0805202	RST CHIPR 2K OHM +-5% 1/8W	
R911	061G0805203	CHIP 20KOHM 1/8W	
R824	061G0805204	RST CHIPR 200 KOHM +-5% 1/8W	
R943	061G0805220	RST CHIPR 22 OHM +-5% 1/8W	
R978	061G0805240 2F	RST CHIPR 24 KOHM +-1% 1/8W	
R987	061G0805270 2F	RST CHIPR 27 KOHM +-1% 1/8W	

Downloaded from www.Manualslib.com manuals search engine

R938	061G0805362	RST CHIPR 3.6 KOHM +-5% 1/8W	
R975	061G0805392	3.9 KOHM 1/10W	
R915	061G0805471	RST CHIPR 470 OHM +-5% 1/8W	
R942	061G0805513	RST CHIPR 51K OHM +-5% 1/8W	
R917	061G0805563	RST CHIPR 56K OHM +-5% 1/8W	
R906	061G0805564 Y	RST CHIPR 560KOHM +-5% 1/8W YAGEO	
R818	061G0805754	RST CHIPR 750K OHM +-5% 1/8W	
R822	061G0805824	RST CHIPR 820 KOHM +-5% 1/8W	
R827	061G0805910 0F	RST CHIP 910 OHM 1/8W 1%	
R958	061G0805910 1F	RST CHIPR 9.1 KOHM +-1% 1/8W	
R932	061G1206100	RST CHIPR 10 OHM +-5% 1/4W	
R950	061G1206101	RST CHIPR 100 OHM +-5% 1/4W	
R951	061G1206101	RST CHIPR 100 OHM +-5% 1/4W	
R952	061G1206101	RST CHIPR 100 OHM +-5% 1/4W	
R953	061G1206101	RST CHIPR 100 OHM +-5% 1/4W	
R970	061G1206101	RST CHIPR 100 OHM +-5% 1/4W	
R971	061G1206101	RST CHIPR 100 OHM +-5% 1/4W	
R935	061G1206102	RST CHIPR 1K OHM +-5% 1/4W	
R945	061G1206102	RST CHIPR 1K OHM +-5% 1/4W	
R974	061G1206102	RST CHIPR 1K OHM +-5% 1/4W	
R941	061G1206103	RST CHIPR 10K OHM +-5% 1/4W	
R929	061G1206103	RST CHIPR 10K OHM +-5% 1/4W	
R918	061G1206103	RST CHIPR 10K OHM +-5% 1/4W	
R832	061G1206103	RST CHIPR 10K OHM +-5% 1/4W	
R831	061G1206103	RST CHIPR 10K OHM +-5% 1/4W	
R9404	061G1206104	RST CHIPR 100 KOHM +-5% 1/4W	
R9403	061G1206104	RST CHIPR 100 KOHM +-5% 1/4W	
R9402	061G1206104	RST CHIPR 100 KOHM +-5% 1/4W	
R9401	061G1206104	RST CHIPR 100 KOHM +-5% 1/4W	
R9214	061G1206104	RST CHIPR 100 KOHM +-5% 1/4W	
R9213	061G1206104	RST CHIPR 100 KOHM +-5% 1/4W	
R9212	061G1206104	RST CHIPR 100 KOHM +-5% 1/4W	
R9211	061G1206104	RST CHIPR 100 KOHM +-5% 1/4W	
R820	061G1206105	1M 1206	
R830	061G1206105	1M 1206	
R924	061G1206105	1M 1206	
R925	061G1206105	1M 1206	
R926	061G1206105	1M 1206	
R909	061G1206155	RST CHIPR 1.5 MOHM +-5% 1/4W	
R905	061G1206155	RST CHIPR 1.5 MOHM +-5% 1/4W	
R904	061G1206155	RST CHIPR 1.5 MOHM +-5% 1/4W	
R968	061G1206222	RST CHIPR 2.2KOHM +-5% 1/4W	
R969	061G1206222	RST CHIPR 2.2KOHM +-5% 1/4W	
R972	061G1206222	RST CHIPR 2.2KOHM +-5% 1/4W	
R973	061G1206222	RST CHIPR 2.2KOHM +-5% 1/4W	
R931	061G1206229	RST CHIPR 2.2 OHM +-5% 1/4W	
R907	061G1206249	RST CHIPR 2.4 OHM +-5% 1/4W	
R908	061G1206249	RST CHIPR 2.4 OHM +-5% 1/4W	
R910	061G1206304	RST CHIPR 300K OHM +-5% 1/4W	
R913	061G1206330	RST CHIPR 33 OHM +-5% 1/4W	
R901	061G1206334	RST CHIPR 330KOHM +-5% 1/4W	
R902	061G1206334	RST CHIPR 330KOHM +-5% 1/4W	
R903	061G1206334	RST CHIPR 330KOHM +-5% 1/4W	
R817	061G1206335	RST CHIPR 3.3M OHM +-5% 1/4W	

Downloaded from www.Manualslib.com manuals search engine

R819	061G12064702FF	RST CHIPR 47K OHM +-1% 1/4W FENGHUA	
R937	061G1206475	RST CHIPR 4.7 MOHM +-5% 1/4W	
R967	061G1206622	RST CHIPR 6.2 KOHM +-5% 1/4W	
R966	061G1206622	RST CHIPR 6.2 KOHM +-5% 1/4W	
R920	061G1206680 3F	RST CHIPR 680KOHM +-1% 1/4W	
R921	061G1206680 3F	RST CHIPR 680KOHM +-1% 1/4W	
R922	061G1206680 3F	RST CHIPR 680KOHM +-1% 1/4W	
R816	061G12067502FF	RST CHIPR 75KOHM +-1% 1/4W FENGHUA	
C971	065G080510232K Y	CAP CHIP 0805 1N 50V X7R +/-10%	
C970	065G080510232K Y	CAP CHIP 0805 1N 50V X7R +/-10%	
C961	065G080510232K Y	CAP CHIP 0805 1N 50V X7R +/-10%	
C960	065G080510232K Y	CAP CHIP 0805 1N 50V X7R +/-10%	
C951	065G080510232K Y	CAP CHIP 0805 1N 50V X7R +/-10%	
C950	065G080510232K Y	CAP CHIP 0805 1N 50V X7R +/-10%	
C820	065G080510232K Y	CAP CHIP 0805 1N 50V X7R +/-10%	
C812	065G080510232K Y	CAP CHIP 0805 1N 50V X7R +/-10%	
C909	065G080510332K Y	CAP CHIP 0805 10N 50V X7R +/-10%	
C920	065G080510332K Y	CAP CHIP 0805 10N 50V X7R +/-10%	
C810	065G080510422K Y	CAP CHIP 0805 100N 25V X7R +/-10%	
C816	065G080510422K Y	CAP CHIP 0805 100N 25V X7R +/-10%	
C907	065G080510432K Y	CAP CHIP 0805 100N 50V X7R +/-10%	
C908	065G080510432K Y	CAP CHIP 0805 100N 50V X7R +/-10%	
C913	065G080510432K Y	CAP CHIP 0805 100N 50V X7R +/-10%	
C921	065G080510432K Y	CAP CHIP 0805 100N 50V X7R +/-10%	
C923	065G080510432K Y	CAP CHIP 0805 100N 50V X7R +/-10%	
C942	065G080510432K Y	CAP CHIP 0805 100N 50V X7R +/-10%	
C943	065G080510432K Y	CAP CHIP 0805 100N 50V X7R +/-10%	
C956	065G080510432K Y	CAP CHIP 0805 100N 50V X7R +/-10%	
C974	065G080510432K Y	CAP CHIP 0805 100N 50V X7R +/-10%	
C977	065G080510432K Y	CAP CHIP 0805 100N 50V X7R +/-10%	
C978	065G080510432K Y	CAP CHIP 0805 100N 50V X7R +/-10%	
C979	065G080510432K Y	CAP CHIP 0805 100N 50V X7R +/-10%	
C815	065G080510522K 3	CAP CHIP 0805 1U 25V X7R +/-10%	
C922	065G080510537Z 3	CAP CHIP 0805 1U 50V Y5V -20%+80%	
C944	065G080522132K Y	CAP CHIP 0805 220P 50V X7R +/-10%	
C915	065G080522132K Y	CAP CHIP 0805 220P 50V X7R +/-10%	
C955	065G080522432K Y	CAP CHIP 0805 0.22UF K 50V X7R	
C803	065G080522522K M	MLCC 0805 CAP 2.2UF 25V X7R	
C813	065G080522522K M	MLCC 0805 CAP 2.2UF 25V X7R	
C811	065G080533131G A	CAP CHIP 0805 330PF J 50V NPO	
C804	065G080533131J Y	CAP CHIP 0805 330PF J 50V NPO	
C808	065G080533131J Y	CAP CHIP 0805 330PF J 50V NPO	
C976	065G080533432K Y	CAP CHIP 0805 330N 50V X7R +/-10%	
C817	065G080547222K Y	CAP CHIP 0805 4700PF K 25V X7R	
C822	065G080547232K Y	CAP CHIP 0805 4700PF K 50V X7R	
C823	065G080547232K Y	CAP CHIP 0805 4700PF K 50V X7R	
C917	065G080547332K Y	CAP CHIP 0805 47N 50V X7R +/-10%	
D805	093G 64 42 PP	BAV70 SOT-23	
D806	093G 64 42 PP	BAV70 SOT-23	
D801	093T 60S 5 T	SCS0520P SOD-123	
D802	093T 60S 5 T	SCS0520P SOD-123	
D803	093T 60S 5 T	SCS0520P SOD-123	
D804	093T 60S 5 T	SCS0520P SOD-123	
IC952	056G 158 10 T	IC AS431AZTR-E1 TO-92	

Downloaded from www.Manualslib.com manuals search engine

IC971	056G 158 10 T	IC AS431AZTR-E1 TO-92	
R836	061G 30310852T GP	FUSE RESISTOR	
R948	061G 30310852T GP	FUSE RESISTOR	
C929	065G 1K1529AT	C CAP. 1500PF 1KV	
C939	065G 1K1529AT	C CAP. 1500PF 1KV	
C933	067G 2152207NT	KY50VB22M-TP5 5*11	
C931	067G215D1017KT	EC CAP 100UF 50V 8*12MM	
C941	067G215Y1007KT	KY50VB10M-TP5 5*11.5	
C937	067G215Y1007KT	KY50VB10M-TP5 5*11.5	
C914	067G215Y4707KT	47UF 50V	
ZD951	093G 3916652T	MTZJ15B (13.89-14.62)	
ZD901	093G 3916752T	MTZJ T-72 16B	
ZD952	093G 3917052T	MTZJ27B (24.97-26.26V)	
D935	093G 5250S52T	DIODE AU02Z-V1 SANKEN	
D903	093G 64 1152T	1N4148	
D954	093G 64 1152T	1N4148	
D955	093G 64 1152T	1N4148	
D930	093T1080 252T	DIODE SARSO1-V1 SANKEN	
D940	093T1080 252T	DIODE SARSO1-V1 SANKEN	
E715	715G3425P01000003S	POWER BOARD PCB	
J901	095G 90 23	JUMPER WIRE	
J902	095G 90 23	JUMPER WIRE	
J903	095G 90 23	JUMPER WIRE	
J904	095G 90 23	JUMPER WIRE	
J905	095G 90 23	JUMPER WIRE	
J906	095G 90 23	JUMPER WIRE	
J907	095G 90 23	JUMPER WIRE	
J908	095G 90 23	JUMPER WIRE	
J909	095G 90 23	JUMPER WIRE	
J910	095G 90 23	JUMPER WIRE	
J911	095G 90 23	JUMPER WIRE	
J912	095G 90 23	JUMPER WIRE	
J913	095G 90 23	JUMPER WIRE	
J914	095G 90 23	JUMPER WIRE	
J915	095G 90 23	JUMPER WIRE	
J916	095G 90 23	JUMPER WIRE	
J917	095G 90 23	JUMPER WIRE	
J918	095G 90 23	JUMPER WIRE	
J919	095G 90 23	JUMPER WIRE	
J920	095G 90 23	JUMPER WIRE	
J921	095G 90 23	JUMPER WIRE	
J922	095G 90 23	JUMPER WIRE	
J924	095G 90 23	JUMPER WIRE	
J925	095G 90 23	JUMPER WIRE	
J926	095G 90 23	JUMPER WIRE	
J927	095G 90 23	JUMPER WIRE	
J929	095G 90 23	JUMPER WIRE	
J931	095G 90 23	JUMPER WIRE	
J932	095G 90 23	JUMPER WIRE	
J934	095G 90 23	JUMPER WIRE	
J935	095G 90 23	JUMPER WIRE	
J936	095G 90 23	JUMPER WIRE	
J937	095G 90 23	JUMPER WIRE	
J938	095G 90 23	JUMPER WIRE	

Downloaded from www.Manualslib.com manuals search engine

J939	095G 90 23	JUMPER WIRE	
J940	095G 90 23	JUMPER WIRE	
J941	095G 90 23	JUMPER WIRE	
J942	095G 90 23	JUMPER WIRE	
J943	095G 90 23	JUMPER WIRE	
J944	095G 90 23	JUMPER WIRE	
J947	095G 90 23	JUMPER WIRE	
J948	095G 90 23	JUMPER WIRE	
J949	095G 90 23	JUMPER WIRE	
T801	006G 31 4	1.7MM RIVET	
R934	061G 17210252T	1K OHM 5% 1/4W	
D808	093G 64 1152T	1N4148	
D807	093G 64 1152T	1N4148	
R916	061T152M15852T	RST MOFR 0.15 OHM +-5% 2WS	
R946	061G152M43852T	RST MOF 0R43 5% 2W	
J946	095G 90 23	JUMPER WIRE	
J950	095G 90 23	JUMPER WIRE	
J951	095G 90 23	JUMPER WIRE	
ZD901	093G 3954752T	DIODE MTZJ16B SEMTECH	
IC952	056G 158 12	KIA431A-AT/P TO-92	
IC971	056G 158 12	KIA431A-AT/P TO-92	
Q925	057G 420 3 T	TRA KTA1273-Y- AT/ P_TO-92L KEC	
FB902	071G 55 9 T	FERRITE BEAD	
FB903	071G 55 29	FERRITE BEAD	
FB904	071G 55 29	FERRITE BEAD	
J952	095G 90 23	JUMPER WIRE	
CN901	006G 31500 GP	EYELET	
ZD951	093G 39G 5	DIODE MTZJ15B DO-34	
ZD952	093G 39G 6	DIODE MTZJ27B DO-34	
J953	095G 90 23	JUMPER WIRE	
D901	093G 52 1552T	DIODE 1N4007-E3/73 1A/1000V DO-41	
J945	095G 90 23	JUMPER WIRE	
E715	715G3425P01000003M	POWER BOARD PCB	2nd source
JR801	061G1206000	RST CHIP MAX 0R05 1/4W	
JR803	061G1206000	RST CHIP MAX 0R05 1/4W	
JR807	061G1206000	RST CHIP MAX 0R05 1/4W	
R837	061G1206394	RST CHIPR 390 KOHM +-5% 1/4W	
R825	061G0805513	RST CHIPR 51K OHM +-5% 1/8W	
R814	061G12062702FF	RST CHIPR 27KOHM +-1% 1/4W FENGHUA	
JR901	061G1206000	RST CHIP MAX 0R05 1/4W	
JR802	061G1206000	RST CHIP MAX 0R05 1/4W	
R803	061T1206560 F	RST CHIPR 56 OHM +-5% 1/4W FENGHUA	
R804	061T1206560 F	RST CHIPR 56 OHM +-5% 1/4W FENGHUA	
R805	061T1206560 F	RST CHIPR 56 OHM +-5% 1/4W FENGHUA	
R810	061T1206560 F	RST CHIPR 56 OHM +-5% 1/4W FENGHUA	
R811	061T1206560 F	RST CHIPR 56 OHM +-5% 1/4W FENGHUA	
R812	061T1206560 F	RST CHIPR 56 OHM +-5% 1/4W FENGHUA	
D905	093G 60S 34 T	DIODE SCS140V 1A/40V SC-76	
D906	093G 60S 34 T	DIODE SCS140V 1A/40V SC-76	
C819	065G080556231J F	CAP CHIP 0805 5600PF J 50V NPO	
R829	061G08051602FF	RST CHIPR 16KOHM +-1% 1/8W FENGHUA	
C912	065G080556031J F	CAP CHIP 0805 56PF J 50V NPO	
C814	065G080568231J F	CHIP 10PF 50V NPO	
C818	065G120622522K T	CAP CHIP 1206 2.2UF K 25V X7R	

Downloaded from www.Manualslib.com manuals search engine

C918	065G120647432K T	CAP CHIP 1206 0.47UF K 50V X7R	
	Q37T0135012	HINGE ASSY	
	Q40G2010 26001	IO SIDE LABEL	
	Q45G 88525G27	AIR BUBBLE BAG	
	Q45G 88525T28	PE BAG	
	Q45G 88525T31	PE BAG	
	Q45G 99606 25 ESD	INSULATING PE BAG	
	Q45G 99606 25 ESD	INSULATING PE BAG	
	Q85T0153101	19-32-SIDE-BKT	
	052G 1185	MIDDLE TAPE (Y1200141)	
	705TQ949001	COMSUPTIVE ASS'Y-A4	
	040G 581689 4A	BARCODE LABEL FOR 1	
	040G 581689 4A	BARCODE LABEL FOR 1	
	052G 1185	MIDDLE TAPE (Y1200141)	
	052G 1186	SMALL TAPE	
	052G 1207 A	CONDUCTIVE TAPE 45MM *25MM *0.08MM	
	052G 1211 B	CONDUCTIVE TAPE 85MM *40MM *0.09MM	
	052G 2191 A	PAPER TAPE	
	085T 583103	GASKET	
	089G404A18N IS	POWER CORD	
	092TB1JX1A3WGM	BATTERY FOR ALL EXPORT MODE LR03	
ECN750	095G8018 3DH99	LVDS CABLE 30P-30P 290MM	
ECN750	095G8018 3XH99	LVDS CABLE 30P-30P 290MM	2nd source
	095G8019 3E 4	HARNESS 3P-2P 260MM	
	098GRABDUNTHRJ	REMOTE CONTROL FOR HAIER USB	
	0M1G 130 6120	SCREW M3X6	
	0M1G 140 8225 CR3	SCREW	
	0M1G 930 8 47 CR3	SCREW	
	0M1G 940 6120	SCREW (M4X6)	
	0M1G 940 6120	SCREW (M4X6)	
	0M1G 940 12 47 CR3	SCREW	
	0M1G1730 8120	SCREW	
	0Q1G 340 12 47 CR3	SCREW	
	0Q1G 930 8 47 CR3	SCREW	
	0Q1G 930 8 47 CR3	SCREW	
	0Q1G 930 8 47 CR3	SCREW	
	0Q1G 940 12 47 CR3	SCREW	
	0Q1G 940 14 47 CR3	SCREW	
	705TQ94115A	MANUAL ASS'Y	
	Q40G000267225A	HOTLINE LABEL	
	Q41G19MV672 1A	MANUAL	
	Q41G783067211A	WARRANTY CARD	
	Q41G78SV67227A	QSG	
	Q45G2010M0201A	PE BAG	
	040G 58162435A	P/N LABEL FOR MANUAL PE BAG	
	040G 58162435A	P/N LABEL FOR MANUAL PE BAG	
	705TQ9SKE17	26"HAIER BEZEL AND BACK COVER ASS'Y	
	001G6021 1	SCREW	
SP01	078T 521 1 Y	SPEAKER 8 OHM 6W 140X42.3MM	
ECN391	095G801410W637	HARNESS 10P-5P+ 3P 360/450MM	
ECN391	095G801410X637	HARNESS 10P-5P+ 3P 360/450MM	2nd source
	0Q1G 340 10 47 CR3	SCREW	
	0Q1G1830 6120	SCREW	
	0Q1G3030 6 47 CR3	SCREW	

Downloaded from www.Manualslib.com manuals search engine

	705TQ934E97	REAR COVER ASS”Y 26”	
	A34T1018 GM 2L0130	REAR COVER 26"	
	Q36T 600 31 1	NONWOVEN FABRIC	
	Q36T 600 31 1	NONWOVEN FABRIC	
	Q36T 600 37 16 GP	NONWOVEN FABRIC	
	705TQ934EA3	BEZEL ASS'Y 26"	
	A33T0536 GME1L0100	KEY HOLDER	
	A33T0537 QV 1L0100	KEY PAD	
	A33T0552 ED 1C0100	LENS IR	
	A33T0563 1 1C0100	POWER LENS	
	A34T1058 GMC1L0130	BEZEL 26"	
	KEPF9QAK	KEY BOARD	
CN001	033G8032 3F HR	CONNECTOR 3P 1.25	
R001	061G06031102FY	RST CHIPR 11KOHM +-1% 1/10W YAGEO	
R005	061G06031102FY	RST CHIPR 11KOHM +-1% 1/10W YAGEO	
R007	061G06031801FY	RST CHIPR 1.8KOHM +-1% 1/10W YAGEO	
R003	061G06031801FY	RST CHIPR 1.8KOHM +-1% 1/10W YAGEO	
R006	061G06034301FT	RST CHIP 4K3 1/10W 1%	
R002	061G06034301FT	RST CHIP 4K3 1/10W 1%	
R004	061G06034700FT	RST CHIP 470R 1/10W 1%	
C002	065G060310422K F	CAP CHIP 0603 0.1UF K 25V X7R	
C001	065G060310422K F	CAP CHIP 0603 0.1UF K 25V X7R	
SW06	077G 607 2 FD	CHIP TACT SW BY FORWARD SFKQGMA2125T-PL	
SW07	077G 607 2 FD	CHIP TACT SW BY FORWARD SFKQGMA2125T-PL	
SW03	077G 607 2 FD	CHIP TACT SW BY FORWARD SFKQGMA2125T-PL	
SW04	077G 607 2 FD	CHIP TACT SW BY FORWARD SFKQGMA2125T-PL	
SW05	077G 607 2 FD	CHIP TACT SW BY FORWARD SFKQGMA2125T-PL	
SW02	077G 607 2 FD	CHIP TACT SW BY FORWARD SFKQGMA2125T-PL	
SW01	077G 607 2 FD	CHIP TACT SW BY FORWARD SFKQGMA2125T-PL	
ZD001	093G 64 37 N	VPORT0603100KV05	
ZD002	093G 64 37 N	VPORT0603100KV05	
E715	715G3293K01001004S	KEY BOARD PCB	
E715	715G3293K01001004W	KEY BOARD PCB	2nd source
	Q36T 600 18134	NONWOVEN FABRIC	
	Q36T 600 37 16 GP	NONWOVEN FABRIC	
	A34T1612 GM 1L0100	COVER IO SIDE 26/32	
	IRPF9QAR	IR BOARD	
U201	056G 627503	IC GP18B38BCE-HB	
CN201	033G8032 5F HR	CONNECTOR	
R203	061G0603330 JT	RST CHIP 33R 1/10W 5% TZAI YUAN	
R202	061G0603330 JT	RST CHIP 33R 1/10W 5% TZAI YUAN	
R201	061G0603330 JT	RST CHIP 33R 1/10W 5% TZAI YUAN	
R204	061G0603330 JT	RST CHIP 33R 1/10W 5% TZAI YUAN	
R205	061G0603332 JF	RST CHIPR 3.3KOHM 5% 1/10W FENGHUA	
C201	065G060310132K Y	CAP CHIP 0603 100PF K 50V X7R	
C203	065G060310432K 3	CAP CHIP 0603 0.1UF K 50V X7R	
C202	065G0805106A7Z 3	CAP CHIP 0805 10U 10V Y5V -20~+80%	
LED201	081G 14 24 EL	CHIP LED BLUE/DARK RED	
	715G3870R01000004M	IR BOARD PCB	

Downloaded from www.Manualslib.com manuals search engine

	P15T8299 1	BKT-VESA	
	Q36T 600 44 1 GP	NONWOVEN FABRIC	
	Q40G2010 26100	IO LABEL	
	705TQ9SKE18	BASE ASS'Y	
	0Q1G 130 6120	SCREW (T3X6)	
	A15T0649201	BASE BKT	
	A34T1059 GM 1L0100	BASE FOR 26	
	Q12G6082 1	FOOT PAD	
	705TQASCE02001	MAIN BOARD ASS'Y	
	756TQACB 2B004 01	MAIN BOARD-CBPF92KBQNS	
U402	056G1133 34	M24C02-WMN6TP	
U715	056G1133 34	M24C02-WMN6TP	
U304	056G1133 34	M24C02-WMN6TP	
U201	056G113353A	IC M24C32-WMN6T SO-8 ST	
U302	056G1133923 1	IC MX25L4005AM2I-12G SOP-8	
U301	056G1133945	IC HY27US08281A-TPCB TSOP48	
CBPF-U301	100TZKGF013B11	MCU ASS'Y-056G1133945	
SMTF-U302	100TZKGF014B11	MCU ASS'Y-056G1133923 1	
SMTF-U201	100TZKGF015B11	MCU ASS'Y-056G113353A	
SMTF-U715	100TZKGFA07B1E	MCU ASS'Y-056G1133 34	
SMTF-U304	100TZKGFB07B1E	MCU ASS'Y-056G1133 34	
SMTF-U402	100TZKGFV07B1E	MCU ASS'Y-056G1133 34	
	040G 45762412B	CBPC LABEL	
CN501	033G3802 4B Y L	CONN 2.0 4P	
CN750	033G8027 30	WAFER 30P 2.0MM DIP DUAL ROW	
CN100	033T327812D	WAFER 12P PLUG	
CN203	033T3802 3E X	WAFER 2.0MM 3P	
CN501	033T3802 4B Y	CONNECTOR	
CN391	033T380210B Y	CONNECTOR	
C630	067G 2154714KT	EC 470UF 25V ED 10X12MM	
C684	067G 2154714KT	EC 470UF 25V ED 10X12MM	
C149	067G215C4714RV	EC ZLH 470UF 25V 10*12.5	
C279	067G215C4714RV	EC ZLH 470UF 25V 10*12.5	
C592	067G215H221 3C	EC 220UF 16V SY 8X7MM	
C593	067G215H221 3C	EC 220UF 16V SY 8X7MM	
C584	067G215S3316KV	EC 330UF M 35V 10*12MM	
C583	067G215S3316KV	EC 330UF M 35V 10*12MM	
C143	067G215Y4713RV	LOW E.S.R 470UF +-20% 16V	
C134	067G215Y4713RV	LOW E.S.R 470UF +-20% 16V	
C125	067G215Y4713RV	LOW E.S.R 470UF +-20% 16V	
L600	073G 253178 L	CHOKE COIL 22UH+-25% CC-005184	
L601	073G 253178 L	CHOKE COIL 22UH+-25% CC-005184	
CN407	088G 78 13934 C	RCA JACK 1*3 Y/W/R AV3-8.4-13-1	
CN407	088G 78 13934 YG	RCA JACK 1*3 Y/W/R RCA-314E-011	
CN502	088G 30211K	PHONE JACK 5PIN	
CN201	088G 352 2 YG	USB CONNECTOR USB4-01	
CN201	088G 352 21CL	USB CONN TYPE A	
CN753	088G 35521U C	SCART CONN. 21P V/T RGB21-V16-2011	
CN401	088G 35521U C	SCART CONN. 21P V/T RGB21-V16-2011	
CN753	088G 35521UYGO	SCART CONN. 21P V/T RC-2119-02	
CN401	088G 35521UYGO	SCART CONN. 21P V/T RC-2119-02	
CN701	088G 500903 P	PCMCIA CONN. CPC-ALNSCH0	
CN403	088T 78 1360C	RCA JACK 1*3 G/BL/R V/A	
CN404	088T 78 13935 S	RCA JACK 1*3 W/R/B V/A 2PJ1535-001111	

Downloaded from www.Manualslib.com manuals search engine

CN404	088T 78 13A35 YG	RCA JACK 1*3 W/R/B V/A RCA-346D-01	
CN403	088T 78 13A36 YG	RCA JACK 1*3 G/BL/R V/A RCA-346D-02	
CN405	088T 30252C	PHONE JACK 3.5MM 3P V/A GREEN	
CN405	088T 302A17 YG	PHONE JACK 3.5MM 3P V/T GREEN	
CN406	088T 35315FVSC	D-SUB 15PIN VERTICAL CONN WITH SCREW	
CN406	088T 35315FVSD	D-SUB 15PIN VERTICAL CONNECTOR	2nd source
X202	093G 22923 C	CRYSTAL 54M 10P HC-49S	
TU501	094G DVB T 9P	TUNER DVB-T FQD1116ME/BH-TPV	2nd source
C752	067G 2151014PT	EC 105℃ CAP 100UF M 25V	
C7903	067G 3051007CT	EC 10UF/50V KM 5*11MM	
C131	067G 3051012CT	EC 100UF 10V KM 5X11MM	
C132	067G 3051012CT	EC 100UF 10V KM 5X11MM	
C161	067G 3051012CT	EC 100UF 10V KM 5X11MM	
C228	067G 3051012CT	EC 100UF 10V KM 5X11MM	
C464	067G 3051012CT	EC 100UF 10V KM 5X11MM	
C619	067G 3051012CT	EC 100UF 10V KM 5X11MM	
C7827	067G 3051012CT	EC 100UF 10V KM 5X11MM	
C268	067G 3052207XT	105℃ 22UF +-20% 50V	
C114	067G 3053312CT	EC 330UF 10V KM 6.3X11MM	
C698	067G 3053313PT	E.C 330UF M 16V 8*12	
C642	067G 305470 4T	CAP EC 47UF/25 M 5*11 105C DI	
C7823	067G215A4712KT	EC 470UF 10V 8*12.5MM	
C7947	067G215Y4704KT	EC CAP.105 C	
C7824	067G305S4712CT	EC 470UF 10V KW 8X9MM	
C695	067G515A4704CT	EC 47UF 25V GF 5*11MM	
C697	067G515A4704CT	EC 47UF 25V GF 5*11MM	
C7939	067G515A4704CT	EC 47UF 25V GF 5*11MM	
U712	056G 133 23 R	BA17809FP-E2	
U158	056G 1331PH	IC LD1117S18 SOT-223	
U105	056G 379115	IC AP1538SG-13 SOP-8L	
U400	056G 562283	IC MT5360BMU/B LQFP-256	
U152	056G 563129	IC AME8810-AEGTZ 0.6A/3.3V SOT-223	
U203	056G 563143	IC G1084T43UF TO-252	
U153	056G 563152	IC G1117T43UF TO-252	
U711	056G 581 9	IC G5250K1T1U SOT23-5	
U200	056G 615 67	IC NT5TU32M16CG-25C 512MB BGA-84	
U718	056G 623906	IC NLASB3157DFT2G SC-88	
U713	056G 623906	IC NLASB3157DFT2G SC-88	
U720	056G 634 26	IC PI3HDMI301ZLEX QFN-64	
U406	056G 643 35	IC MAX809STRG 2.93V SOT23-3	
U310	056G 662 10	IC RCLAMP0524P.TCT	
U304	056G1133 34	M24C02-WMN6TP	
U402	056G1133 34	M24C02-WMN6TP	
U715	056G1133 34	M24C02-WMN6TP	
U201	056G113353A	IC M24C32-WMN6T SO-8 ST	
U302	056G1133923 1	IC MX25L4005AM2I-12G SOP-8	
U301	056G1133945	IC HY27US08281A-TPCB TSOP48	
U707	056T 563949	IC LD39080PT-R PPAK	
U104	056T 563951	IC LD1117ADT-TR DPAK	
U153	056T 563951	IC LD1117ADT-TR DPAK	
U157	056T 563956	IC AME5106AIHAADJZ SOP8	
U707	056T 563957	IC LD29150PTR PPAK	
U605	056T 593 34	IC MT8292 QFN-48	
U600	056T 616912	IC TDA8933BTW HTSSOP32	

Downloaded from www.Manualslib.com manuals search engine

U718	056T 623904	IC TS5A3157DCKR SC70	
U713	056T 623904	IC TS5A3157DCKR SC70	
U702	056T1126 40	IC MT8295AE LQFP-128	
Q783	057G 417 18 T	PMBT3904 SOT-23	
Q782	057G 417 18 T	PMBT3904 SOT-23	
Q773	057G 417 18 T	PMBT3904 SOT-23	
Q751	057G 417 18 T	PMBT3904 SOT-23	
Q750	057G 417 18 T	PMBT3904 SOT-23	
Q608	057G 417 18 T	PMBT3904 SOT-23	
Q606	057G 417 18 T	PMBT3904 SOT-23	
Q604	057G 417 18 T	PMBT3904 SOT-23	
Q401	057G 417 18 T	PMBT3904 SOT-23	
Q302	057G 417 18 T	PMBT3904 SOT-23	
Q203	057G 417 18 T	PMBT3904 SOT-23	
Q605	057G 417512	MMBT3906	
Q701	057G 417512	MMBT3906	
Q702	057G 417512	MMBT3906	
Q703	057G 417512	MMBT3906	
Q704	057G 417512	MMBT3906	
Q101	057G 419513	BC847C	
Q151	057G 419513	BC847C	
Q776	057G 419911 T	TRA 2A/12V 2SD2653K SOT-346	
Q151	057G 477900 T	TRA SIG SM BC847C (KEC0) R	
Q101	057G 477900 T	TRA SIG SM BC847C (KEC0) R	
Q601	057G 477904 T	TRA BC847BW 100MA/45V SOT-323	
Q607	057G 477904 T	TRA BC847BW 100MA/45V SOT-323	
Q780	057G 760900	DIGITAL TR DTC623TK SMT3	
Q779	057G 760900	DIGITAL TR DTC623TK SMT3	
Q771	057G 760900	DIGITAL TR DTC623TK SMT3	
Q769	057G 760900	DIGITAL TR DTC623TK SMT3	
Q603	057G 760900	DIGITAL TR DTC623TK SMT3	
Q602	057G 760900	DIGITAL TR DTC623TK SMT3	
Q503	057G 760900	DIGITAL TR DTC623TK SMT3	
Q502	057G 760900	DIGITAL TR DTC623TK SMT3	
Q150	057G 763112	MOS SI5403DC-T1-GE3 30V/6A	
Q104	057G 7631PH	FET POW SM SI5441DC(VISH)R	
Q774	057T 417 18 T	PMBT3904 SOT-23	
Q775	057T 417 18 T	PMBT3904 SOT-23	
Q781	057T 419911 T	TRA 2A/12V 2SD2653K SOT-346	
TH201	061G 56A050 WT	SMD PTC 0.5A KMC3S050RY 1206	
R1096	061G0402000 JT	RST CHIPR MAX0R05 1/16W TZAI YUAN	
R1089	061G0402000 JT	RST CHIPR MAX0R05 1/16W TZAI YUAN	
R771	061G0402000 JT	RST CHIPR MAX0R05 1/16W TZAI YUAN	
R772	061G0402000 JT	RST CHIPR MAX0R05 1/16W TZAI YUAN	
R773	061G0402000 JT	RST CHIPR MAX0R05 1/16W TZAI YUAN	
R7810	061G0402000 JT	RST CHIPR MAX0R05 1/16W TZAI YUAN	
R7877	061G0402000 JT	RST CHIPR MAX0R05 1/16W TZAI YUAN	
R7878	061G0402000 JT	RST CHIPR MAX0R05 1/16W TZAI YUAN	
R7879	061G0402000 JT	RST CHIPR MAX0R05 1/16W TZAI YUAN	
R7880	061G0402000 JT	RST CHIPR MAX0R05 1/16W TZAI YUAN	
R7905	061G0402000 JT	RST CHIPR MAX0R05 1/16W TZAI YUAN	
R7906	061G0402000 JT	RST CHIPR MAX0R05 1/16W TZAI YUAN	
R7935	061G0402000 JT	RST CHIPR MAX0R05 1/16W TZAI YUAN	
R7936	061G0402000 JT	RST CHIPR MAX0R05 1/16W TZAI YUAN	

Downloaded from www.Manualslib.com manuals search engine

R7959	061G0402000 JT	RST CHIPR MAX0R05 1/16W TZAI YUAN	
R1128	061G0402000 JT	RST CHIPR MAX0R05 1/16W TZAI YUAN	
R237	061G0402000 JT	RST CHIPR MAX0R05 1/16W TZAI YUAN	
R238	061G0402000 JT	RST CHIPR MAX0R05 1/16W TZAI YUAN	
R411	061G0402000 JT	RST CHIPR MAX0R05 1/16W TZAI YUAN	
R412	061G0402000 JT	RST CHIPR MAX0R05 1/16W TZAI YUAN	
R413	061G0402000 JT	RST CHIPR MAX0R05 1/16W TZAI YUAN	
R415	061G0402000 JT	RST CHIPR MAX0R05 1/16W TZAI YUAN	
R447	061G0402000 JT	RST CHIPR MAX0R05 1/16W TZAI YUAN	
R502	061G0402000 JT	RST CHIPR MAX0R05 1/16W TZAI YUAN	
R600	061G0402000 JT	RST CHIPR MAX0R05 1/16W TZAI YUAN	
R618	061G0402000 JT	RST CHIPR MAX0R05 1/16W TZAI YUAN	
R662	061G0402000 JT	RST CHIPR MAX0R05 1/16W TZAI YUAN	
R696	061G0402000 JT	RST CHIPR MAX0R05 1/16W TZAI YUAN	
R1078	061G0402000 JT	RST CHIPR MAX0R05 1/16W TZAI YUAN	
R1052	061G0402000 JT	RST CHIPR MAX0R05 1/16W TZAI YUAN	
R7814	061G0402000 JY	RST CHIPR 0 OHM +-5% 1/16W YAGEO	
R414	061G04021000FY	RST CHIP 100R 1/16W 1%	
R1097	061G04021000FY	RST CHIP 100R 1/16W 1%	
R1090	061G04021000FY	RST CHIP 100R 1/16W 1%	
R498	061G04021000FY	RST CHIP 100R 1/16W 1%	
R1123	061G0402101 JT	RST CHIP 100R 1/16W 5% TZAI YUAN	
R1079	061G0402101 JT	RST CHIP 100R 1/16W 5% TZAI YUAN	
R633	061G0402101 JT	RST CHIP 100R 1/16W 5% TZAI YUAN	
R621	061G0402101 JT	RST CHIP 100R 1/16W 5% TZAI YUAN	
R619	061G0402101 JT	RST CHIP 100R 1/16W 5% TZAI YUAN	
R450	061G0402101 JT	RST CHIP 100R 1/16W 5% TZAI YUAN	
R433	061G0402101 JT	RST CHIP 100R 1/16W 5% TZAI YUAN	
R214	061G0402101 JT	RST CHIP 100R 1/16W 5% TZAI YUAN	
R7964	061G0402101 JY	RST CHIPR 100 OHM +-5% 1/16W YAGEO	
R7832	061G0402101 JY	RST CHIPR 100 OHM +-5% 1/16W YAGEO	
R7831	061G0402101 JY	RST CHIPR 100 OHM +-5% 1/16W YAGEO	
R1154	061G0402103 JF	RST CHIPR 10KOHM +-5% 1/16W FENGHUA	
R1153	061G0402103 JF	RST CHIPR 10KOHM +-5% 1/16W FENGHUA	
R1152	061G0402103 JF	RST CHIPR 10KOHM +-5% 1/16W FENGHUA	
R1136	061G0402103 JF	RST CHIPR 10KOHM +-5% 1/16W FENGHUA	
R7813	061G0402103 JT	RST CHIP 10K 1/16W 5% TZAI YUAN	
R226	061G0402103 JT	RST CHIP 10K 1/16W 5% TZAI YUAN	
R1056	061G0402103 JT	RST CHIP 10K 1/16W 5% TZAI YUAN	
R7902	061G0402104 JW	RST CHIPR 100KOHM +-5% 1/16W WALSIN	
R7960	061G0402104 JY	RST CHIPR 100KOHM +-5% 1/16W YAGEO	
R557	061G0402104 JY	RST CHIPR 100KOHM +-5% 1/16W YAGEO	
R556	061G0402104 JY	RST CHIPR 100KOHM +-5% 1/16W YAGEO	
R209	061G0402151 JF	RST CHIPR 150 OHM +-5% 1/16W FENGHUA	
R501	061G0402152 JT	RST CHIP 1K5 1/16W 5% TZAI YUAN	
R441	061G0402152 JT	RST CHIP 1K5 1/16W 5% TZAI YUAN	
R7824	061G0402201 JT	RST CHIP 200R 1/16W 5% TZAI YUAN	
R7822	061G0402201 JT	RST CHIP 200R 1/16W 5% TZAI YUAN	
R785	061G0402222 Y	RST CHIPR 2.2KOHM +-5% 1/16W YAGEO	
R784	061G0402222 Y	RST CHIPR 2.2KOHM +-5% 1/16W YAGEO	
R782	061G0402222 Y	RST CHIPR 2.2KOHM +-5% 1/16W YAGEO	
R785	061G0402222 JT	RST CHIP 2K2 1/16W 5% TZAI YUAN	
R784	061G0402222 JT	RST CHIP 2K2 1/16W 5% TZAI YUAN	
R782	061G0402222 JT	RST CHIP 2K2 1/16W 5% TZAI YUAN	

Downloaded from www.Manualslib.com manuals search engine

R780	061G0402222 JT	RST CHIP 2K2 1/16W 5% TZAI YUAN	
R612	061G0402223 JT	RST CHIP 22K 1/16W 5% TZAI YUAN	
R634	061G0402223 JT	RST CHIP 22K 1/16W 5% TZAI YUAN	
R7931	061G0402223 JT	RST CHIP 22K 1/16W 5% TZAI YUAN	
R1103	061G0402273 JW	RST CHIP 27K 1/16W 5% WALSIN	
R1104	061G0402273 JW	RST CHIP 27K 1/16W 5% WALSIN	
R453	061G0402273 JW	RST CHIP 27K 1/16W 5% WALSIN	
R454	061G0402273 JW	RST CHIP 27K 1/16W 5% WALSIN	
R455	061G0402273 JW	RST CHIP 27K 1/16W 5% WALSIN	
R456	061G0402273 JW	RST CHIP 27K 1/16W 5% WALSIN	
R457	061G0402273 JW	RST CHIP 27K 1/16W 5% WALSIN	
R458	061G0402273 JW	RST CHIP 27K 1/16W 5% WALSIN	
R459	061G0402273 JW	RST CHIP 27K 1/16W 5% WALSIN	
R460	061G0402273 JW	RST CHIP 27K 1/16W 5% WALSIN	
R206	061G0402330 JT	RST CHIP 33R 1/16W 5% TZAI YUAN	
R205	061G0402330 JT	RST CHIP 33R 1/16W 5% TZAI YUAN	
R1130	061G0402331 JT	RST CHIP 330R 1/16W 5% TZAI YUAN	
R371	061G0402331 JY	RST CHIPR 330 OHM +-5% 1/16W YAGEO	
R635	061G0402393 JW	RST CHIP 39K 1/16W 5% WALSIN	
R770	061G0402470 JW	RST CHIP 47R 1/16W 5% WALSIN	
R1149	061G0402472 JF	RST CHIPR 4.7KOHM +-5% 1/16W FENGHUA	
R1148	061G0402472 JF	RST CHIPR 4.7KOHM +-5% 1/16W FENGHUA	
R1145	061G0402472 JF	RST CHIPR 4.7KOHM +-5% 1/16W FENGHUA	
R1144	061G0402472 JF	RST CHIPR 4.7KOHM +-5% 1/16W FENGHUA	
R1141	061G0402472 JF	RST CHIPR 4.7KOHM +-5% 1/16W FENGHUA	
R1140	061G0402472 JF	RST CHIPR 4.7KOHM +-5% 1/16W FENGHUA	
R1138	061G0402472 JF	RST CHIPR 4.7KOHM +-5% 1/16W FENGHUA	
R1137	061G0402472 JF	RST CHIPR 4.7KOHM +-5% 1/16W FENGHUA	
R533	061G0402472 JT	RST CHIP 4K7 1/16W 5% TZAI YUAN	
R7930	061G0402472 JT	RST CHIP 4K7 1/16W 5% TZAI YUAN	
R399	061G0402472 JT	RST CHIP 4K7 1/16W 5% TZAI YUAN	
R7965	061G0402472 JY	RST CHIPR 4.7KOHM +-5% 1/16W YAGEO	
R7963	061G0402472 JY	RST CHIPR 4.7KOHM +-5% 1/16W YAGEO	
R7961	061G0402472 JY	RST CHIPR 4.7KOHM +-5% 1/16W YAGEO	
R699	061G0402472 JY	RST CHIPR 4.7KOHM +-5% 1/16W YAGEO	
R698	061G0402473 JW	RST CHIP 47K 1/16W 5% WALSIN	
R697	061G0402473 JW	RST CHIP 47K 1/16W 5% WALSIN	
R1119	061G0402473 JW	RST CHIP 47K 1/16W 5% WALSIN	
R1108	061G0402473 JW	RST CHIP 47K 1/16W 5% WALSIN	
R609	061G0402473 JY	RST CHIPR 47KOHM +-5% 1/16W YAGEO	
R625	061G0402473 JY	RST CHIPR 47KOHM +-5% 1/16W YAGEO	
R7962	061G0402473 JY	RST CHIPR 47KOHM +-5% 1/16W YAGEO	
R406	061G04025600FT	RST CHIP 560R 1/16W 1%	
R1107	061G0402561 JF	RST CHIP 560R 1/16W 5% FENGHUA	
R1116	061G0402561 JF	RST CHIP 560R 1/16W 5% FENGHUA	
R7894	061G0402561 JF	RST CHIP 560R 1/16W 5% FENGHUA	
R7895	061G0402561 JF	RST CHIP 560R 1/16W 5% FENGHUA	
R428	061G0402680 JT	RST CHIP 68R 1/16W 5% TZAI YUAN	
R432	061G0402680 JT	RST CHIP 68R 1/16W 5% TZAI YUAN	
R436	061G0402680 JT	RST CHIP 68R 1/16W 5% TZAI YUAN	
R468	061G0402680 JT	RST CHIP 68R 1/16W 5% TZAI YUAN	
R470	061G0402680 JT	RST CHIP 68R 1/16W 5% TZAI YUAN	
R471	061G0402680 JT	RST CHIP 68R 1/16W 5% TZAI YUAN	
R443	061G0402681 JW	RST CHIP 680R 1/16W 5% WALSIN	

Downloaded from www.Manualslib.com manuals search engine

R442	061G0402681 JW	RST CHIP 680R 1/16W 5% WALSIN	
R448	061G04026819FY	RST CHIP 68.1R 1/16W 1% YAGEO	
R451	061G04026819FY	RST CHIP 68.1R 1/16W 1% YAGEO	
R452	061G04026819FY	RST CHIP 68.1R 1/16W 1% YAGEO	
R1053	061G0402750 JT	RST CHIPR 75 OHM +-5% 1/16W TZAI YUAN	
R1080	061G0402750 JT	RST CHIPR 75 OHM +-5% 1/16W TZAI YUAN	
R210	061G0402750 JT	RST CHIPR 75 OHM +-5% 1/16W TZAI YUAN	
R211	061G0402750 JT	RST CHIPR 75 OHM +-5% 1/16W TZAI YUAN	
R446	061G04027509FY	RST CHIPR 75 OHM +-1% 1/16W YAGEO	
R465	061G04027509FY	RST CHIPR 75 OHM +-1% 1/16W YAGEO	
R466	061G04027509FY	RST CHIPR 75 OHM +-1% 1/16W YAGEO	
R467	061G04027509FY	RST CHIPR 75 OHM +-1% 1/16W YAGEO	
R445	061G04027509FY	RST CHIPR 75 OHM +-1% 1/16W YAGEO	
R444	061G04027509FY	RST CHIPR 75 OHM +-1% 1/16W YAGEO	
R439	061G04027509FY	RST CHIPR 75 OHM +-1% 1/16W YAGEO	
R417	061G04027509FY	RST CHIPR 75 OHM +-1% 1/16W YAGEO	
R1091	061G04027509FY	RST CHIPR 75 OHM +-1% 1/16W YAGEO	
R1098	061G04027509FY	RST CHIPR 75 OHM +-1% 1/16W YAGEO	
R641	061G0402822 JY	RST CHIPR 8.2KOHM +-5% 1/16W YAGEO	
R639	061G0402822 JY	RST CHIPR 8.2KOHM +-5% 1/16W YAGEO	
R628	061G0402822 JY	RST CHIPR 8.2KOHM +-5% 1/16W YAGEO	
R626	061G0402822 JY	RST CHIPR 8.2KOHM +-5% 1/16W YAGEO	
R555	061G0603000 JF	RST CHIPR MAX 0R05 1/10W FENGHUA	
R554	061G0603000 JF	RST CHIPR MAX 0R05 1/10W FENGHUA	
R552	061G0603000 JF	RST CHIPR MAX 0R05 1/10W FENGHUA	
R551	061G0603000 JF	RST CHIPR MAX 0R05 1/10W FENGHUA	
R531	061G0603000 JT	RST CHIP MAX 0R05 1/10W TZAI YUAN	
R524	061G0603000 JT	RST CHIP MAX 0R05 1/10W TZAI YUAN	
R523	061G0603000 JT	RST CHIP MAX 0R05 1/10W TZAI YUAN	
R464	061G0603000 JT	RST CHIP MAX 0R05 1/10W TZAI YUAN	
R422	061G0603000 JT	RST CHIP MAX 0R05 1/10W TZAI YUAN	
R401	061G0603000 JT	RST CHIP MAX 0R05 1/10W TZAI YUAN	
R1133	061G0603000 JT	RST CHIP MAX 0R05 1/10W TZAI YUAN	
R1131	061G0603000 JT	RST CHIP MAX 0R05 1/10W TZAI YUAN	
R1129	061G0603000 JT	RST CHIP MAX 0R05 1/10W TZAI YUAN	
R1115	061G0603000 JT	RST CHIP MAX 0R05 1/10W TZAI YUAN	
R111	061G0603000 JT	RST CHIP MAX 0R05 1/10W TZAI YUAN	
R1088	061G0603000 JT	RST CHIP MAX 0R05 1/10W TZAI YUAN	
R7937	061G0603000 JT	RST CHIP MAX 0R05 1/10W TZAI YUAN	
R7921	061G0603000 JT	RST CHIP MAX 0R05 1/10W TZAI YUAN	
R724	061G0603000 JT	RST CHIP MAX 0R05 1/10W TZAI YUAN	
R715	061G0603000 JT	RST CHIP MAX 0R05 1/10W TZAI YUAN	
R714	061G0603000 JT	RST CHIP MAX 0R05 1/10W TZAI YUAN	
R713	061G0603000 JT	RST CHIP MAX 0R05 1/10W TZAI YUAN	
R707	061G0603000 JT	RST CHIP MAX 0R05 1/10W TZAI YUAN	
R706	061G0603000 JT	RST CHIP MAX 0R05 1/10W TZAI YUAN	
R705	061G0603000 JT	RST CHIP MAX 0R05 1/10W TZAI YUAN	
R614	061G0603000 JT	RST CHIP MAX 0R05 1/10W TZAI YUAN	
R613	061G0603000 JT	RST CHIP MAX 0R05 1/10W TZAI YUAN	
R611	061G0603000 JT	RST CHIP MAX 0R05 1/10W TZAI YUAN	
R608	061G0603000 JT	RST CHIP MAX 0R05 1/10W TZAI YUAN	
R532	061G0603000 JT	RST CHIP MAX 0R05 1/10W TZAI YUAN	
R1106	061G0603000 JT	RST CHIP MAX 0R05 1/10W TZAI YUAN	
R1121	061G0603100 JT	RST CHIP 10R 1/10W 5% TZAI YUAN	

Downloaded from www.Manualslib.com manuals search engine

R1085	061G0603100 JT	RST CHIP 10R 1/10W 5% TZAI YUAN	
R201	061G06031001FT	RST CHIP 1K 1/10W 1%	
R202	061G06031001FT	RST CHIP 1K 1/10W 1%	
R342	061G0603101 JF	RST CHIPR 100 OHM +-5% 1/10W FENGHUA	
R1076	061G0603101 JT	RST CHIP 100R 1/10W 5% TZAI YUAN	
R1068	061G0603101 JY	RST CHIPR 100 OHM +-5% 1/10W YAGEO	
R1069	061G0603101 JY	RST CHIPR 100 OHM +-5% 1/10W YAGEO	
R258	061G0603101 JY	RST CHIPR 100 OHM +-5% 1/10W YAGEO	
R259	061G0603101 JY	RST CHIPR 100 OHM +-5% 1/10W YAGEO	
R325	061G0603101 JY	RST CHIPR 100 OHM +-5% 1/10W YAGEO	
R326	061G0603101 JY	RST CHIPR 100 OHM +-5% 1/10W YAGEO	
R489	061G0603101 JY	RST CHIPR 100 OHM +-5% 1/10W YAGEO	
R7912	061G0603101 JY	RST CHIPR 100 OHM +-5% 1/10W YAGEO	
R7915	061G0603101 JY	RST CHIPR 100 OHM +-5% 1/10W YAGEO	
R7933	061G0603101 JY	RST CHIPR 100 OHM +-5% 1/10W YAGEO	
R7893	061G0603102 JF	RST CHIPR 1K OHM +-5% 1/10W FENGHUA	
R793	061G0603102 JF	RST CHIPR 1K OHM +-5% 1/10W FENGHUA	
R207	061G0603102 JF	RST CHIPR 1K OHM +-5% 1/10W FENGHUA	
R1163	061G0603102 JF	RST CHIPR 1K OHM +-5% 1/10W FENGHUA	
R1162	061G0603102 JF	RST CHIPR 1K OHM +-5% 1/10W FENGHUA	
R1159	061G0603102 JF	RST CHIPR 1K OHM +-5% 1/10W FENGHUA	
R1158	061G0603102 JF	RST CHIPR 1K OHM +-5% 1/10W FENGHUA	
R1062	061G0603102 JT	RST CHIP 1K 1/10W 5% TZAI YUAN	
R758	061G0603102 JY	RST CHIPR 1KOHM +-5% 1/10W YAGEO	
R7957	061G0603103 JF	RST CHIPR 10K OHM +-5% 1/10W FENGHUA	
R1072	061G0603103 JT	RST CHIP 10K 1/10W 5% TZAI YUAN	
R1075	061G0603103 JT	RST CHIP 10K 1/10W 5% TZAI YUAN	
R1120	061G0603103 JT	RST CHIP 10K 1/10W 5% TZAI YUAN	
R732	061G0603103 JY	RST CHIPR 10KOHM +-5% 1/10W YAGEO	
R733	061G0603103 JY	RST CHIPR 10KOHM +-5% 1/10W YAGEO	
R734	061G0603103 JY	RST CHIPR 10KOHM +-5% 1/10W YAGEO	
R1064	061G0603103 JY	RST CHIPR 10KOHM +-5% 1/10W YAGEO	
R138	061G0603103 JY	RST CHIPR 10KOHM +-5% 1/10W YAGEO	
R158	061G0603103 JY	RST CHIPR 10KOHM +-5% 1/10W YAGEO	
R256	061G0603103 JY	RST CHIPR 10KOHM +-5% 1/10W YAGEO	
R323	061G0603103 JY	RST CHIPR 10KOHM +-5% 1/10W YAGEO	
R478	061G0603103 JY	RST CHIPR 10KOHM +-5% 1/10W YAGEO	
R480	061G0603103 JY	RST CHIPR 10KOHM +-5% 1/10W YAGEO	
R503	061G0603103 JY	RST CHIPR 10KOHM +-5% 1/10W YAGEO	
R604	061G0603103 JY	RST CHIPR 10KOHM +-5% 1/10W YAGEO	
R605	061G0603103 JY	RST CHIPR 10KOHM +-5% 1/10W YAGEO	
R615	061G0603103 JY	RST CHIPR 10KOHM +-5% 1/10W YAGEO	
R631	061G0603103 JY	RST CHIPR 10KOHM +-5% 1/10W YAGEO	
R652	061G0603103 JY	RST CHIPR 10KOHM +-5% 1/10W YAGEO	
R674	061G0603103 JY	RST CHIPR 10KOHM +-5% 1/10W YAGEO	
R7913	061G0603103 JY	RST CHIPR 10KOHM +-5% 1/10W YAGEO	
R7910	061G0603103 JY	RST CHIPR 10KOHM +-5% 1/10W YAGEO	
R7816	061G0603103 JY	RST CHIPR 10KOHM +-5% 1/10W YAGEO	
R7812	061G0603103 JY	RST CHIPR 10KOHM +-5% 1/10W YAGEO	
R7807	061G0603103 JY	RST CHIPR 10KOHM +-5% 1/10W YAGEO	
R7805	061G0603103 JY	RST CHIPR 10KOHM +-5% 1/10W YAGEO	
R759	061G0603103 JY	RST CHIPR 10KOHM +-5% 1/10W YAGEO	
R675	061G0603103 JY	RST CHIPR 10KOHM +-5% 1/10W YAGEO	
R677	061G0603103 JY	RST CHIPR 10KOHM +-5% 1/10W YAGEO	

Downloaded from www.Manualslib.com manuals search engine

R681	061G0603103 JY	RST CHIPR 10KOHM +-5% 1/10W YAGEO	
R725	061G0603103 JY	RST CHIPR 10KOHM +-5% 1/10W YAGEO	
R726	061G0603103 JY	RST CHIPR 10KOHM +-5% 1/10W YAGEO	
R728	061G0603103 JY	RST CHIPR 10KOHM +-5% 1/10W YAGEO	
R731	061G0603103 JY	RST CHIPR 10KOHM +-5% 1/10W YAGEO	
R1061	061G0603104 JT	RST CHIP 100K 1/10W 5% TZAI YUAN	
R1063	061G0603104 JT	RST CHIP 100K 1/10W 5% TZAI YUAN	
R1160	061G0603104 JT	RST CHIP 100K 1/10W 5% TZAI YUAN	
R1164	061G0603104 JT	RST CHIP 100K 1/10W 5% TZAI YUAN	
R7811	061G0603104 JT	RST CHIP 100K 1/10W 5% TZAI YUAN	
R7958	061G0603104 JT	RST CHIP 100K 1/10W 5% TZAI YUAN	
R683	061G0603105 JY	RST CHIP 1M 1/10W 5% YAGEO	
R684	061G0603105 JY	RST CHIP 1M 1/10W 5% YAGEO	
R717	061G0603105 JY	RST CHIP 1M 1/10W 5% YAGEO	
R253	061G0603109 JW	RST CHIP 1R 1/10W 5% WALSIN	
R203	061G06031100FT	RST CHIP 110R 1/10W 1%	
R110	061G06031200FY	RST CHIPR 120 OHM +-1% 1/10W YAGEO	
R151	061G06031200FY	RST CHIPR 120 OHM +-1% 1/10W YAGEO	
R154	061G06031200FY	RST CHIPR 120 OHM +-1% 1/10W YAGEO	
R774	061G06031201FY	RST CHIPR 1.2KOHM +-1% 1/10W YAGEO	
R7803	061G0603122 JF	RST CHIPR 1.2KOHM 5% 1/10W FENGHUA	
R1073	061G0603151 JF	RST CHIPR 150 OHM +-5% 1/10W FENGHUA	
R1087	061G0603151 JT	RST CHIP 150R 1/10W 5% TZAI YUAN	
R123	061G0603152 JW	RST CHIPR 1.5KOHM 1/10W WALSIN	
R106	061G06031621FY	RST CHIPR 1.62KOHM +-1% 1/10W YAGEO	
R430	061G06031829FF	RST CHIPR 18.2 OHM +-1% 1/10W FENGHUA	
R437	061G06031829FF	RST CHIPR 18.2 OHM +-1% 1/10W FENGHUA	
R438	061G06031829FF	RST CHIPR 18.2 OHM +-1% 1/10W FENGHUA	
R7890	061G06032002FF	RST CHIPR 20KOHM +-1% 1/10W FENGHUA	
R764	061G0603202 JF	RST CHIPR 2K OHM +-5% 1/10W FENGHUA	
R103	061G0603203 JF	RST CHIPR 20K OHM +-5% 1/10W FENGHUA	
R627	061G06032202FY	RST CHIPR 22KOHM +-1% 1/10W YAGEO	
R640	061G06032202FY	RST CHIPR 22KOHM +-1% 1/10W YAGEO	
R1105	061G0603222 JT	RST CHIP 2K2 1/10W 5% TZAI YUAN	
R462	061G0603222 JT	RST CHIP 2K2 1/10W 5% TZAI YUAN	
R7919	061G0603223 JF	RST CHIPR 22KOHM 5% 1/10W FENGHUA	
R102	061G06032401FY	RST CHIPR 2.4KOHM +-1% 1/10W YAGEO	
R341	061G0603241 JF	RST CHIPR 240OHM 1/10W FENGHUA	
R119	061G0603272 JF	RST CHIPR 2.7KOHM 5% 1/10W FENGHUA	
R7806	061G0603302 JF	RST CHIP 3KOHM 5% 1/10W FENGHUA	
R220	061G0603330 JY	RST CHIPR 33 OHM 1/10W YAGEO	
R718	061G0603330 JY	RST CHIPR 33 OHM 1/10W YAGEO	
R719	061G0603330 JY	RST CHIPR 33 OHM 1/10W YAGEO	
R721	061G0603330 JY	RST CHIPR 33 OHM 1/10W YAGEO	
R7898	061G0603330 JY	RST CHIPR 33 OHM 1/10W YAGEO	
R7920	061G0603333 JF	RST CHIPR 33KOHM 1/10W FENGHUA	
R7804	061G0603333 JT	RST CHIP 33K 1/10W 5% TZAI YUAN	
R1126	061G0603333 JT	RST CHIP 33K 1/10W 5% TZAI YUAN	
R241	061G06033921FF	RST CHIPR 3.92KOHM +-1% 1/10W FENGHUA	
R242	061G06033921FF	RST CHIPR 3.92KOHM +-1% 1/10W FENGHUA	
R7892	061G06034701FY	RST CHIPR 4.7KOHM +-1% 1/10W YAGEO	
R623	061G0603471 JF	RST CHIPR 470OHM +-5% 1/10W FENGHUA	
R624	061G0603471 JF	RST CHIPR 470OHM +-5% 1/10W FENGHUA	
R654	061G0603471 JF	RST CHIPR 470OHM +-5% 1/10W FENGHUA	

Downloaded from www.Manualslib.com manuals search engine

R655	061G0603471 JF	RST CHIPR 470OHM +-5% 1/10W FENGHUA	
R679	061G0603471 JF	RST CHIPR 470OHM +-5% 1/10W FENGHUA	
R680	061G0603471 JF	RST CHIPR 470OHM +-5% 1/10W FENGHUA	
R1070	061G0603471 JF	RST CHIPR 470OHM +-5% 1/10W FENGHUA	
R321	061G0603472 JT	RST CHIP 4K7 1/10W 5% TZAI YUAN	
R317	061G0603472 JT	RST CHIP 4K7 1/10W 5% TZAI YUAN	
R315	061G0603472 JT	RST CHIP 4K7 1/10W 5% TZAI YUAN	
R311	061G0603472 JT	RST CHIP 4K7 1/10W 5% TZAI YUAN	
R310	061G0603472 JT	RST CHIP 4K7 1/10W 5% TZAI YUAN	
R307	061G0603472 JT	RST CHIP 4K7 1/10W 5% TZAI YUAN	
R302	061G0603472 JT	RST CHIP 4K7 1/10W 5% TZAI YUAN	
R261	061G0603472 JT	RST CHIP 4K7 1/10W 5% TZAI YUAN	
R260	061G0603472 JT	RST CHIP 4K7 1/10W 5% TZAI YUAN	
R219	061G0603472 JT	RST CHIP 4K7 1/10W 5% TZAI YUAN	
R218	061G0603472 JT	RST CHIP 4K7 1/10W 5% TZAI YUAN	
R216	061G0603472 JT	RST CHIP 4K7 1/10W 5% TZAI YUAN	
R1165	061G0603472 JT	RST CHIP 4K7 1/10W 5% TZAI YUAN	
R322	061G0603472 JT	RST CHIP 4K7 1/10W 5% TZAI YUAN	
R308	061G0603472 JT	RST CHIP 4K7 1/10W 5% TZAI YUAN	
R7956	061G0603472 JT	RST CHIP 4K7 1/10W 5% TZAI YUAN	
R792	061G0603472 JT	RST CHIP 4K7 1/10W 5% TZAI YUAN	
R7821	061G0603472 JT	RST CHIP 4K7 1/10W 5% TZAI YUAN	
R7820	061G0603472 JT	RST CHIP 4K7 1/10W 5% TZAI YUAN	
R761	061G0603472 JT	RST CHIP 4K7 1/10W 5% TZAI YUAN	
R730	061G0603472 JT	RST CHIP 4K7 1/10W 5% TZAI YUAN	
R727	061G0603472 JT	RST CHIP 4K7 1/10W 5% TZAI YUAN	
R723	061G0603472 JT	RST CHIP 4K7 1/10W 5% TZAI YUAN	
R722	061G0603472 JT	RST CHIP 4K7 1/10W 5% TZAI YUAN	
R716	061G0603472 JT	RST CHIP 4K7 1/10W 5% TZAI YUAN	
R659	061G0603472 JT	RST CHIP 4K7 1/10W 5% TZAI YUAN	
R365	061G0603472 JT	RST CHIP 4K7 1/10W 5% TZAI YUAN	
R1067	061G0603472 JT	RST CHIP 4K7 1/10W 5% TZAI YUAN	
R327	061G0603473 JY	RST CHIPR 47KOHM 1/10W YAGEO	
R301	061G0603473 JY	RST CHIPR 47KOHM 1/10W YAGEO	
R121	061G0603473 JY	RST CHIPR 47KOHM 1/10W YAGEO	
R1074	061G0603473 JY	RST CHIPR 47KOHM 1/10W YAGEO	
R1071	061G0603473 JY	RST CHIPR 47KOHM 1/10W YAGEO	
R1066	061G0603473 JY	RST CHIPR 47KOHM 1/10W YAGEO	
R1065	061G0603473 JY	RST CHIPR 47KOHM 1/10W YAGEO	
R105	061G06035101FF	RST CHIPR 5.1KOHM +-1% 1/10W FENGHUA	
R254	061G06035101FF	RST CHIPR 5.1KOHM +-1% 1/10W FENGHUA	
R204	061G06035119FF	RST CHIPR 51.1 OHM +-1% 1/10W FENGHUA	
R7891	061G06035362FF	RST CHIPR 53.6KOHM +-1% 1/10W FENGHUA	
R610	061G0603560 JF	RST CHIPR 56 OHM +-5% 1/10W FENGHUA	
R606	061G0603560 JF	RST CHIPR 56 OHM +-5% 1/10W FENGHUA	
R760	061G0603562 JF	RST CHIPR 5.6KOHM 5% 1/10W FENGHUA	
R7802	061G0603562 JW	RST CHIPR 5.6KOHM +-5% 1/10W WALSIN	
R429	061G06035629FY	RST CHIPR 56.2R +-1% 1/10W YAGEO	
R431	061G06035629FY	RST CHIPR 56.2R +-1% 1/10W YAGEO	
R435	061G06035629FY	RST CHIPR 56.2R +-1% 1/10W YAGEO	
R139	061G0603621 JF	RST CHIPR 620OHM +-5% 1/10W FENGHUA	
R775	061G0603680 1F	RST CHIPR 6.8 KOHM +-1% 1/10W	
R1102	061G0603682 JT	RST CHIP 6K8 1/10W 5% TZAI YUAN	
R135	061G0603682 JT	RST CHIP 6K8 1/10W 5% TZAI YUAN	

Downloaded from www.Manualslib.com manuals search engine

R461	061G0603682 JT	RST CHIP 6K8 1/10W 5% TZAI YUAN	
R463	061G0603750 JT	RST CHIP 75R 1/10W 5% TZAI YUAN	
R1127	061G0603750 JT	RST CHIP 75R 1/10W 5% TZAI YUAN	
R1125	061G0603750 JT	RST CHIP 75R 1/10W 5% TZAI YUAN	
R1122	061G0603750 JT	RST CHIP 75R 1/10W 5% TZAI YUAN	
R1086	061G06037509FT	RST CHIP 75R 1/10W 1%	
R130	061G0603752 JT	RST CHIP 7K5 1/10W 5% TZAI YUAN	
R1060	061G0805000 JF	RST CHIPR 0 OHM +-5% 1/8W FENGHUA	
R1058	061G0805000 JT	RST CHIPR 0 OHM +- 5% 1/8W TZAI YUAN	
R636	061G0805100 JT	RST CHIP 10R 1/8W 5% TZAI YUAN	
R7950	061G1206000 JF	RST CHIPR MAX0R05 1/4W FENGHUA	
R7948	061G1206000 JF	RST CHIPR MAX0R05 1/4W FENGHUA	
R7946	061G1206000 JF	RST CHIPR MAX0R05 1/4W FENGHUA	
R7943	061G1206000 JF	RST CHIPR MAX0R05 1/4W FENGHUA	
R7940	061G1206000 JF	RST CHIPR MAX0R05 1/4W FENGHUA	
R7952	061G1206000 JF	RST CHIPR MAX0R05 1/4W FENGHUA	
R7954	061G1206000 JF	RST CHIPR MAX0R05 1/4W FENGHUA	
R7907	061G1206000 JF	RST CHIPR MAX0R05 1/4W FENGHUA	
R101	061G1206000 JT	RST CHIPR MAX0R05 1/4W TZAI YUAN	
R131	061G1206000 JT	RST CHIPR MAX0R05 1/4W TZAI YUAN	
R7889	061G1206000 JT	RST CHIPR MAX0R05 1/4W TZAI YUAN	
R7918	061G1206000 JT	RST CHIPR MAX0R05 1/4W TZAI YUAN	
R7939	061G1206000 JT	RST CHIPR MAX0R05 1/4W TZAI YUAN	
R632	061G1206100 JY	RST CHIPR 10 OHM +-5% 1/4W YAGEO	
R637	061G1206100 JY	RST CHIPR 10 OHM +-5% 1/4W YAGEO	
R638	061G1206220 JF	RST CHIPR 22 OHM +-5% 1/4W FENGHUA	
R629	061G1206220 JF	RST CHIPR 22 OHM +-5% 1/4W FENGHUA	
C7814	065G040210031D Y	CAP CHIP 0402 10PF D 50V NPO	
C7959	065G040210031J Y	CAP CHIP 0402 10P 50V NPO +/-5%	
C311	065G040210132K Y	CHIP 100PF 50V X7R	
C395	065G040210132K Y	CHIP 100PF 50V X7R	
C289	065G040210232K T	CAP CHIP 0402 1000PF 50V X7R	
C243	065G040210312K Y	CAP CHIP 0402 10N 16V X7R +/-10%	
C441	065G040210312K Y	CAP CHIP 0402 10N 16V X7R +/-10%	
C442	065G040210312K Y	CAP CHIP 0402 10N 16V X7R +/-10%	
C443	065G040210312K Y	CAP CHIP 0402 10N 16V X7R +/-10%	
C445	065G040210312K Y	CAP CHIP 0402 10N 16V X7R +/-10%	
C690	065G040210312K Y	CAP CHIP 0402 10N 16V X7R +/-10%	
C691	065G040210312K Y	CAP CHIP 0402 10N 16V X7R +/-10%	
C7942	065G040210312K Y	CAP CHIP 0402 10N 16V X7R +/-10%	
C7943	065G040210312K Y	CAP CHIP 0402 10N 16V X7R +/-10%	
C288	065G040210322K Y	CAP CHIP 0402 10N 25V X7R +/-10%	
C402	065G040210322K Y	CAP CHIP 0402 10N 25V X7R +/-10%	
C403	065G040210322K Y	CAP CHIP 0402 10N 25V X7R +/-10%	
C404	065G040210322K Y	CAP CHIP 0402 10N 25V X7R +/-10%	
C405	065G040210322K Y	CAP CHIP 0402 10N 25V X7R +/-10%	
C412	065G040210322K Y	CAP CHIP 0402 10N 25V X7R +/-10%	
C414	065G040210322K Y	CAP CHIP 0402 10N 25V X7R +/-10%	
C415	065G040210322K Y	CAP CHIP 0402 10N 25V X7R +/-10%	
C448	065G040210322K Y	CAP CHIP 0402 10N 25V X7R +/-10%	
C606	065G040210322K Y	CAP CHIP 0402 10N 25V X7R +/-10%	
C632	065G040210322K Y	CAP CHIP 0402 10N 25V X7R +/-10%	
C7929	065G040210322K Y	CAP CHIP 0402 10N 25V X7R +/-10%	
C7933	065G040210322K Y	CAP CHIP 0402 10N 25V X7R +/-10%	

Downloaded from www.Manualslib.com manuals search engine

C791	065G040210332K	Y	CAP CHIP 0402 10N 50V X7R +/-10%	
C792	065G040210332K	Y	CAP CHIP 0402 10N 50V X7R +/-10%	
R414	065G040210412K	A	CAP CHIP 0402 100NF K 16V X7R	
C201	065G040210412K	A	CAP CHIP 0402 100NF K 16V X7R	
C202	065G040210412K	A	CAP CHIP 0402 100NF K 16V X7R	
C203	065G040210412K	A	CAP CHIP 0402 100NF K 16V X7R	
C205	065G040210412K	A	CAP CHIP 0402 100NF K 16V X7R	
C206	065G040210412K	A	CAP CHIP 0402 100NF K 16V X7R	
C207	065G040210412K	A	CAP CHIP 0402 100NF K 16V X7R	
C208	065G040210412K	A	CAP CHIP 0402 100NF K 16V X7R	
C209	065G040210412K	A	CAP CHIP 0402 100NF K 16V X7R	
C214	065G040210412K	A	CAP CHIP 0402 100NF K 16V X7R	
C215	065G040210412K	A	CAP CHIP 0402 100NF K 16V X7R	
C284	065G040210412K	A	CAP CHIP 0402 100NF K 16V X7R	
C712	065G040210412K	A	CAP CHIP 0402 100NF K 16V X7R	
C711	065G040210412K	A	CAP CHIP 0402 100NF K 16V X7R	
C708	065G040210412K	A	CAP CHIP 0402 100NF K 16V X7R	
C707	065G040210412K	A	CAP CHIP 0402 100NF K 16V X7R	
C704	065G040210412K	A	CAP CHIP 0402 100NF K 16V X7R	
C703	065G040210412K	A	CAP CHIP 0402 100NF K 16V X7R	
C298	065G040210412K	A	CAP CHIP 0402 100NF K 16V X7R	
C296	065G040210412K	A	CAP CHIP 0402 100NF K 16V X7R	
C295	065G040210412K	A	CAP CHIP 0402 100NF K 16V X7R	
C294	065G040210412K	A	CAP CHIP 0402 100NF K 16V X7R	
C292	065G040210412K	A	CAP CHIP 0402 100NF K 16V X7R	
C290	065G040210412K	A	CAP CHIP 0402 100NF K 16V X7R	
C287	065G040210412K	A	CAP CHIP 0402 100NF K 16V X7R	
C285	065G040210412K	A	CAP CHIP 0402 100NF K 16V X7R	
C283	065G040210412K	A	CAP CHIP 0402 100NF K 16V X7R	
C216	065G040210412K	A	CAP CHIP 0402 100NF K 16V X7R	
C217	065G040210412K	A	CAP CHIP 0402 100NF K 16V X7R	
C219	065G040210412K	A	CAP CHIP 0402 100NF K 16V X7R	
C221	065G040210412K	A	CAP CHIP 0402 100NF K 16V X7R	
C224	065G040210412K	A	CAP CHIP 0402 100NF K 16V X7R	
C235	065G040210412K	A	CAP CHIP 0402 100NF K 16V X7R	
C234	065G040210412K	A	CAP CHIP 0402 100NF K 16V X7R	
C233	065G040210412K	A	CAP CHIP 0402 100NF K 16V X7R	
C230	065G040210412K	A	CAP CHIP 0402 100NF K 16V X7R	
C236	065G040210412K	A	CAP CHIP 0402 100NF K 16V X7R	
C249	065G040210412K	A	CAP CHIP 0402 100NF K 16V X7R	
C250	065G040210412K	A	CAP CHIP 0402 100NF K 16V X7R	
C253	065G040210412K	A	CAP CHIP 0402 100NF K 16V X7R	
C255	065G040210412K	A	CAP CHIP 0402 100NF K 16V X7R	
C273	065G040210412K	A	CAP CHIP 0402 100NF K 16V X7R	
C516	065G040210412K	Y	CAP CHIP 0402 100N 16V X7R +/-10%	
C519	065G040210412K	Y	CAP CHIP 0402 100N 16V X7R +/-10%	
C521	065G040210412K	Y	CAP CHIP 0402 100N 16V X7R +/-10%	
C522	065G040210412K	Y	CAP CHIP 0402 100N 16V X7R +/-10%	
C524	065G040210412K	Y	CAP CHIP 0402 100N 16V X7R +/-10%	
C526	065G040210412K	Y	CAP CHIP 0402 100N 16V X7R +/-10%	
C543	065G040210412K	Y	CAP CHIP 0402 100N 16V X7R +/-10%	
C545	065G040210412K	Y	CAP CHIP 0402 100N 16V X7R +/-10%	
C548	065G040210412K	Y	CAP CHIP 0402 100N 16V X7R +/-10%	
C574	065G040210412K	Y	CAP CHIP 0402 100N 16V X7R +/-10%	

Downloaded from www.Manualslib.com manuals search engine

C575	065G040210412K	Y	CAP CHIP 0402 100N 16V X7R +/-10%	
C576	065G040210412K	Y	CAP CHIP 0402 100N 16V X7R +/-10%	
C341	065G040210412K	Y	CAP CHIP 0402 100N 16V X7R +/-10%	
C342	065G040210412K	Y	CAP CHIP 0402 100N 16V X7R +/-10%	
C343	065G040210412K	Y	CAP CHIP 0402 100N 16V X7R +/-10%	
C344	065G040210412K	Y	CAP CHIP 0402 100N 16V X7R +/-10%	
C345	065G040210412K	Y	CAP CHIP 0402 100N 16V X7R +/-10%	
C346	065G040210412K	Y	CAP CHIP 0402 100N 16V X7R +/-10%	
C347	065G040210412K	Y	CAP CHIP 0402 100N 16V X7R +/-10%	
C428	065G040210412K	Y	CAP CHIP 0402 100N 16V X7R +/-10%	
C461	065G040210412K	Y	CAP CHIP 0402 100N 16V X7R +/-10%	
C466	065G040210412K	Y	CAP CHIP 0402 100N 16V X7R +/-10%	
C467	065G040210412K	Y	CAP CHIP 0402 100N 16V X7R +/-10%	
C512	065G040210412K	Y	CAP CHIP 0402 100N 16V X7R +/-10%	
C7946	065G040210412K	Y	CAP CHIP 0402 100N 16V X7R +/-10%	
C7915	065G040210412K	Y	CAP CHIP 0402 100N 16V X7R +/-10%	
C7905	065G040210412K	Y	CAP CHIP 0402 100N 16V X7R +/-10%	
C7948	065G040210412K	Y	CAP CHIP 0402 100N 16V X7R +/-10%	
C7949	065G040210412K	Y	CAP CHIP 0402 100N 16V X7R +/-10%	
C7950	065G040210412K	Y	CAP CHIP 0402 100N 16V X7R +/-10%	
C7951	065G040210412K	Y	CAP CHIP 0402 100N 16V X7R +/-10%	
C7952	065G040210412K	Y	CAP CHIP 0402 100N 16V X7R +/-10%	
C7953	065G040210412K	Y	CAP CHIP 0402 100N 16V X7R +/-10%	
C7954	065G040210412K	Y	CAP CHIP 0402 100N 16V X7R +/-10%	
C7955	065G040210412K	Y	CAP CHIP 0402 100N 16V X7R +/-10%	
C7958	065G040210412K	Y	CAP CHIP 0402 100N 16V X7R +/-10%	
C618	065G040210412K	Y	CAP CHIP 0402 100N 16V X7R +/-10%	
C620	065G040210412K	Y	CAP CHIP 0402 100N 16V X7R +/-10%	
C622	065G040210412K	Y	CAP CHIP 0402 100N 16V X7R +/-10%	
C624	065G040210412K	Y	CAP CHIP 0402 100N 16V X7R +/-10%	
C629	065G040210412K	Y	CAP CHIP 0402 100N 16V X7R +/-10%	
C767	065G040210412K	Y	CAP CHIP 0402 100N 16V X7R +/-10%	
C768	065G040210412K	Y	CAP CHIP 0402 100N 16V X7R +/-10%	
C769	065G040210412K	Y	CAP CHIP 0402 100N 16V X7R +/-10%	
C770	065G040210412K	Y	CAP CHIP 0402 100N 16V X7R +/-10%	
C7906	065G040210412K	Y	CAP CHIP 0402 100N 16V X7R +/-10%	
C7907	065G040210412K	Y	CAP CHIP 0402 100N 16V X7R +/-10%	
C7945	065G040210412K	Y	CAP CHIP 0402 100N 16V X7R +/-10%	
C169	065G040210412K	Y	CAP CHIP 0402 100N 16V X7R +/-10%	
C173	065G040210412K	Y	CAP CHIP 0402 100N 16V X7R +/-10%	
C210	065G040210412K	Y	CAP CHIP 0402 100N 16V X7R +/-10%	
C244	065G040210412K	Y	CAP CHIP 0402 100N 16V X7R +/-10%	
C265	065G040210412K	Y	CAP CHIP 0402 100N 16V X7R +/-10%	
C302	065G040210412K	Y	CAP CHIP 0402 100N 16V X7R +/-10%	
C304	065G040210412K	Y	CAP CHIP 0402 100N 16V X7R +/-10%	
C307	065G040210412K	Y	CAP CHIP 0402 100N 16V X7R +/-10%	
C308	065G040210412K	Y	CAP CHIP 0402 100N 16V X7R +/-10%	
C310	065G040210412K	Y	CAP CHIP 0402 100N 16V X7R +/-10%	
C320	065G040210412K	Y	CAP CHIP 0402 100N 16V X7R +/-10%	
C336	065G040210412K	Y	CAP CHIP 0402 100N 16V X7R +/-10%	
C335	065G040210412K	Y	CAP CHIP 0402 100N 16V X7R +/-10%	
C334	065G040210412K	Y	CAP CHIP 0402 100N 16V X7R +/-10%	
C333	065G040210412K	Y	CAP CHIP 0402 100N 16V X7R +/-10%	
C332	065G040210412K	Y	CAP CHIP 0402 100N 16V X7R +/-10%	

Downloaded from www.Manualslib.com manuals search engine

C331	065G040210412K	Y	CAP CHIP 0402 100N 16V X7R +/-10%	
C328	065G040210412K	Y	CAP CHIP 0402 100N 16V X7R +/-10%	
C327	065G040210412K	Y	CAP CHIP 0402 100N 16V X7R +/-10%	
C326	065G040210412K	Y	CAP CHIP 0402 100N 16V X7R +/-10%	
C322	065G040210412K	Y	CAP CHIP 0402 100N 16V X7R +/-10%	
C321	065G040210412K	Y	CAP CHIP 0402 100N 16V X7R +/-10%	
C423	065G0402105A5K	T	CAP CHIP 0402 1UF K 10V X5R	
C413	065G040215031J	Y	CAP CHIP 0402 15PF J 50V NPO	
C416	065G040215031J	Y	CAP CHIP 0402 15PF J 50V NPO	
C417	065G040215031J	Y	CAP CHIP 0402 15PF J 50V NPO	
C439	065G040215031J	Y	CAP CHIP 0402 15PF J 50V NPO	
C440	065G040215031J	Y	CAP CHIP 0402 15PF J 50V NPO	
C444	065G040215031J	Y	CAP CHIP 0402 15PF J 50V NPO	
C261	065G0402224A5K	T	CAP CHIP 0402 0.22UF 10V X5R	
C718	065G040227031J	Y	CAP CHIP 0402 27P 50V NPO +/-5%	
C717	065G040227031J	Y	CAP CHIP 0402 27P 50V NPO +/-5%	
C646	065G040233132K	Y	CAP CHIP 0402 330P 50V X7R +/-10%	
C627	065G040233132K	Y	CAP CHIP 0402 330P 50V X7R +/-10%	
C291	065G040233132K	Y	CAP CHIP 0402 330P 50V X7R +/-10%	
C245	065G040233232K	Y	CAP CHIP 0402 3N3 50V X7R +/-10%	
C7923	065G040247031J	A	CAP CHIP 0402 47PF J 50V NPO	
C7902	065G040247031J	Y	CAP CHIP 0402 47PF 50V NPO +/-5%	
C447	065G040247031J	Y	CAP CHIP 0402 47PF 50V NPO +/-5%	
C411	065G040247232K	Y	CAP CHIP 0402 4700P 50V X7R +/-10%	
C401	065G040247232K	Y	CAP CHIP 0402 4700P 50V X7R +/-10%	
C418	065G040247312K	T	CAP CHIP 0402 0.047UF 16V X7R	
C446	065G040247312K	T	CAP CHIP 0402 0.047UF 16V X7R	
C777	065G040247312K	T	CAP CHIP 0402 0.047UF 16V X7R	
C778	065G040247312K	T	CAP CHIP 0402 0.047UF 16V X7R	
C7918	065G040247312K	T	CAP CHIP 0402 0.047UF 16V X7R	
C7922	065G040247312K	T	CAP CHIP 0402 0.047UF 16V X7R	
C7940	065G040247312K	T	CAP CHIP 0402 0.047UF 16V X7R	
C7957	065G040247312K	T	CAP CHIP 0402 0.047UF 16V X7R	
C225	065G060310031J	Y	CAP CHIP 0603 10P 50V NPO +/-5%	
C226	065G060310031J	Y	CAP CHIP 0603 10P 50V NPO +/-5%	
C744	065G060310031J	Y	CAP CHIP 0603 10P 50V NPO +/-5%	
C783	065G060310131J	Y	CAP CHIP 0603 100P 50V NPO +/-5%	
C782	065G060310131J	Y	CAP CHIP 0603 100P 50V NPO +/-5%	
C227	065G060310232K	Y	CAP CHIP 0603 1N 50V X7R +/-10%	
ZD515	065G060310312K	A	CAP CHIP 0603 10NF K 16V X7R	
ZD514	065G060310312K	A	CAP CHIP 0603 10NF K 16V X7R	
ZD421	065G060310312K	A	CAP CHIP 0603 10NF K 16V X7R	
ZD420	065G060310312K	A	CAP CHIP 0603 10NF K 16V X7R	
ZD415	065G060310312K	A	CAP CHIP 0603 10NF K 16V X7R	
ZD414	065G060310312K	A	CAP CHIP 0603 10NF K 16V X7R	
ZD413	065G060310312K	A	CAP CHIP 0603 10NF K 16V X7R	
ZD412	065G060310312K	A	CAP CHIP 0603 10NF K 16V X7R	
ZD411	065G060310312K	A	CAP CHIP 0603 10NF K 16V X7R	
ZD410	065G060310312K	A	CAP CHIP 0603 10NF K 16V X7R	
C275	065G060310332K	Y	CAP CHIP 0603 10N 50V X7R +/-10%	
C609	065G060310332K	Y	CAP CHIP 0603 10N 50V X7R +/-10%	
C610	065G060310332K	Y	CAP CHIP 0603 10N 50V X7R +/-10%	
C7908	065G060310332K	Y	CAP CHIP 0603 10N 50V X7R +/-10%	
C727	065G060310412K	Y	CAP CHIP 0603 100N 16V X7R +/-10%	

Downloaded from www.Manualslib.com manuals search engine

C728	065G060310412K	Y	CAP CHIP 0603 100N 16V X7R +/-10%	
C729	065G060310412K	Y	CAP CHIP 0603 100N 16V X7R +/-10%	
C730	065G060310412K	Y	CAP CHIP 0603 100N 16V X7R +/-10%	
C731	065G060310412K	Y	CAP CHIP 0603 100N 16V X7R +/-10%	
C734	065G060310412K	Y	CAP CHIP 0603 100N 16V X7R +/-10%	
C737	065G060310412K	Y	CAP CHIP 0603 100N 16V X7R +/-10%	
C738	065G060310412K	Y	CAP CHIP 0603 100N 16V X7R +/-10%	
C751	065G060310412K	Y	CAP CHIP 0603 100N 16V X7R +/-10%	
C761	065G060310412K	Y	CAP CHIP 0603 100N 16V X7R +/-10%	
C7938	065G060310412K	Y	CAP CHIP 0603 100N 16V X7R +/-10%	
C7916	065G060310412K	Y	CAP CHIP 0603 100N 16V X7R +/-10%	
C102	065G060310412K	Y	CAP CHIP 0603 100N 16V X7R +/-10%	
C123	065G060310412K	Y	CAP CHIP 0603 100N 16V X7R +/-10%	
C130	065G060310412K	Y	CAP CHIP 0603 100N 16V X7R +/-10%	
C133	065G060310412K	Y	CAP CHIP 0603 100N 16V X7R +/-10%	
C151	065G060310412K	Y	CAP CHIP 0603 100N 16V X7R +/-10%	
C211	065G060310412K	Y	CAP CHIP 0603 100N 16V X7R +/-10%	
C390	065G060310412K	Y	CAP CHIP 0603 100N 16V X7R +/-10%	
C392	065G060310412K	Y	CAP CHIP 0603 100N 16V X7R +/-10%	
C394	065G060310412K	Y	CAP CHIP 0603 100N 16V X7R +/-10%	
C539	065G060310412K	Y	CAP CHIP 0603 100N 16V X7R +/-10%	
C550	065G060310412K	Y	CAP CHIP 0603 100N 16V X7R +/-10%	
C726	065G060310412K	Y	CAP CHIP 0603 100N 16V X7R +/-10%	
C278	065G060310422K	Y	CAP CHIP 0603 100N 25V X7R +/-10%	
C468	065G060310422K	Y	CAP CHIP 0603 100N 25V X7R +/-10%	
C136	065G060310432K	F	CAP CHIP 0603 0.1UF K 50V X7R	
C138	065G060310432K	F	CAP CHIP 0603 0.1UF K 50V X7R	
C142	065G060310432K	F	CAP CHIP 0603 0.1UF K 50V X7R	
C144	065G060310432K	F	CAP CHIP 0603 0.1UF K 50V X7R	
C148	065G060310432K	F	CAP CHIP 0603 0.1UF K 50V X7R	
C267	065G060310437Z	Y	CAP CHIP 0603 100N 50V Y5V -20%+80%	
C269	065G060310437Z	Y	CAP CHIP 0603 100N 50V Y5V -20%+80%	
C281	065G060310437Z	Y	CAP CHIP 0603 100N 50V Y5V -20%+80%	
C7909	065G060310437Z	Y	CAP CHIP 0603 100N 50V Y5V -20%+80%	
C716	065G060310437Z	Y	CAP CHIP 0603 100N 50V Y5V -20%+80%	
C715	065G060310437Z	Y	CAP CHIP 0603 100N 50V Y5V -20%+80%	
C644	065G060310437Z	Y	CAP CHIP 0603 100N 50V Y5V -20%+80%	
C641	065G060310437Z	Y	CAP CHIP 0603 100N 50V Y5V -20%+80%	
C637	065G060310437Z	Y	CAP CHIP 0603 100N 50V Y5V -20%+80%	
C636	065G060310437Z	Y	CAP CHIP 0603 100N 50V Y5V -20%+80%	
C628	065G060310437Z	Y	CAP CHIP 0603 100N 50V Y5V -20%+80%	
C607	065G060310437Z	Y	CAP CHIP 0603 100N 50V Y5V -20%+80%	
C604	065G060310437Z	Y	CAP CHIP 0603 100N 50V Y5V -20%+80%	
C603	065G060310437Z	Y	CAP CHIP 0603 100N 50V Y5V -20%+80%	
C602	065G060310437Z	Y	CAP CHIP 0603 100N 50V Y5V -20%+80%	
C597	065G060310437Z	Y	CAP CHIP 0603 100N 50V Y5V -20%+80%	
C596	065G060310437Z	Y	CAP CHIP 0603 100N 50V Y5V -20%+80%	
C623	065G060310512K	3	MLCC 0603 CAP 1UF K 16V X7R	
C621	065G060310512K	3	MLCC 0603 CAP 1UF K 16V X7R	
C579	065G060310512K	3	MLCC 0603 CAP 1UF K 16V X7R	
C577	065G060310512K	3	MLCC 0603 CAP 1UF K 16V X7R	
C573	065G060310512K	3	MLCC 0603 CAP 1UF K 16V X7R	
C572	065G060310512K	3	MLCC 0603 CAP 1UF K 16V X7R	
C570	065G060310512K	3	MLCC 0603 CAP 1UF K 16V X7R	

Downloaded from www.Manualslib.com manuals search engine

C553	065G060310512K	3	MLCC 0603 CAP 1UF K 16V X7R	
C546	065G060310512K	3	MLCC 0603 CAP 1UF K 16V X7R	
C541	065G060310512K	3	MLCC 0603 CAP 1UF K 16V X7R	
C510	065G060310512K	3	MLCC 0603 CAP 1UF K 16V X7R	
C389	065G060310512K	3	MLCC 0603 CAP 1UF K 16V X7R	
C625	065G060310512K	3	MLCC 0603 CAP 1UF K 16V X7R	
C733	065G060310512K	3	MLCC 0603 CAP 1UF K 16V X7R	
C330	065G060310512K	T	CAP CHIP 0603 1UF K 16V X7R	
C318	065G060310512K	T	CAP CHIP 0603 1UF K 16V X7R	
C139	065G060310512K	T	CAP CHIP 0603 1UF K 16V X7R	
C246	065G060310512K	T	CAP CHIP 0603 1UF K 16V X7R	
C247	065G060310512K	T	CAP CHIP 0603 1UF K 16V X7R	
C297	065G060310512K	T	CAP CHIP 0603 1UF K 16V X7R	
C303	065G060310512K	T	CAP CHIP 0603 1UF K 16V X7R	
C306	065G060310512K	T	CAP CHIP 0603 1UF K 16V X7R	
C427	065G060310512K	T	CAP CHIP 0603 1UF K 16V X7R	
C626	065G060310512K	T	CAP CHIP 0603 1UF K 16V X7R	
C631	065G060310512K	T	CAP CHIP 0603 1UF K 16V X7R	
C645	065G060310512K	T	CAP CHIP 0603 1UF K 16V X7R	
C685	065G060310512K	T	CAP CHIP 0603 1UF K 16V X7R	
C7910	065G060310512K	T	CAP CHIP 0603 1UF K 16V X7R	
C701	065G0603105A7Z	3	CAP CHIP 0603 1U 10V Y5V -20%+80%	
C507	065G0603105A7Z	3	CAP CHIP 0603 1U 10V Y5V -20%+80%	
C504	065G0603105A7Z	3	CAP CHIP 0603 1U 10V Y5V -20%+80%	
C293	065G0603105A7Z	3	CAP CHIP 0603 1U 10V Y5V -20%+80%	
C276	065G0603105A7Z	3	CAP CHIP 0603 1U 10V Y5V -20%+80%	
C240	065G0603105A7Z	3	CAP CHIP 0603 1U 10V Y5V -20%+80%	
C238	065G0603105A7Z	3	CAP CHIP 0603 1U 10V Y5V -20%+80%	
C218	065G0603105A7Z	3	CAP CHIP 0603 1U 10V Y5V -20%+80%	
C212	065G0603105A7Z	3	CAP CHIP 0603 1U 10V Y5V -20%+80%	
C127	065G0603105A7Z	3	CAP CHIP 0603 1U 10V Y5V -20%+80%	
C601	065G060315332K	Y	CAP CHIP 0603 15NF K 50V X7R	
C600	065G060315332K	Y	CAP CHIP 0603 15NF K 50V X7R	
C555	065G060322232K	Y	CAP CHIP 0603 2N2 50V X7R +/-10%	
C556	065G060322232K	Y	CAP CHIP 0603 2N2 50V X7R +/-10%	
C557	065G060322232K	Y	CAP CHIP 0603 2N2 50V X7R +/-10%	
C562	065G060322232K	Y	CAP CHIP 0603 2N2 50V X7R +/-10%	
C564	065G060322232K	Y	CAP CHIP 0603 2N2 50V X7R +/-10%	
C566	065G060322232K	Y	CAP CHIP 0603 2N2 50V X7R +/-10%	
C7846	065G060333031J	Y	CAP CHIP 0603 33P 50V NPO +/-5%	
C7944	065G060333931C	Y	CAP CHIP 0603 3P3 50V NPO +/-0.25PF	
C772	065G060339031J	Y	CAP CHIP 0603 39PF J 50V NPO	
C771	065G060339031J	Y	CAP CHIP 0603 39PF J 50V NPO	
C460	065G060347031J	Y	CAP CHIP 0603 47P 50V NPO +/-5%	
C7913	065G060347031J	Y	CAP CHIP 0603 47P 50V NPO +/-5%	
C7919	065G060347031J	Y	CAP CHIP 0603 47P 50V NPO +/-5%	
C7941	065G060347031J	Y	CAP CHIP 0603 47P 50V NPO +/-5%	
C598	065G060347131J	Y	CAP CHIP 0603 470P 50V NPO +/-5%	
C599	065G060347131J	Y	CAP CHIP 0603 470P 50V NPO +/-5%	
C508	065G060347312K	Y	CAP CHIP 0603 47N 16V X7R +/-10%	
C7838	065G060347412K	3	CAP CHIP 0603 0.47UF K 16V X7R	
C204	065G060347505K	T	CAP MLCC 0603 4.7UF K 6.3V X5R	
C213	065G060347505K	T	CAP MLCC 0603 4.7UF K 6.3V X5R	
C220	065G060347505K	T	CAP MLCC 0603 4.7UF K 6.3V X5R	

Downloaded from www.Manualslib.com manuals search engine

C232	065G060347505K	T	CAP MLCC 0603 4.7UF K 6.3V X5R	
C239	065G060347505K	T	CAP MLCC 0603 4.7UF K 6.3V X5R	
C223	065G060347505K	T	CAP MLCC 0603 4.7UF K 6.3V X5R	
C406	065G060350931D	Y	CAP CHIP 0603 5PF 50V NPO +/-0.5PF	
C407	065G060350931D	Y	CAP CHIP 0603 5PF 50V NPO +/-0.5PF	
C408	065G060350931D	Y	CAP CHIP 0603 5PF 50V NPO +/-0.5PF	
C409	065G060350931D	Y	CAP CHIP 0603 5PF 50V NPO +/-0.5PF	
C410	065G060350931D	Y	CAP CHIP 0603 5PF 50V NPO +/-0.5PF	
C567	065G080510617Z	3	CAP CHIP 0805 10U 16V Y5V -20~+80%	
C571	065G080510617Z	3	CAP CHIP 0805 10U 16V Y5V -20~+80%	
C527	065G0805106A7Z	3	CAP CHIP 0805 10U 10V Y5V -20~+80%	
C523	065G0805106A7Z	3	CAP CHIP 0805 10U 10V Y5V -20~+80%	
C520	065G0805106A7Z	3	CAP CHIP 0805 10U 10V Y5V -20~+80%	
C518	065G0805106A7Z	3	CAP CHIP 0805 10U 10V Y5V -20~+80%	
C517	065G0805106A7Z	3	CAP CHIP 0805 10U 10V Y5V -20~+80%	
C505	065G0805106A7Z	3	CAP CHIP 0805 10U 10V Y5V -20~+80%	
C503	065G0805106A7Z	3	CAP CHIP 0805 10U 10V Y5V -20~+80%	
C476	065G0805106A7Z	3	CAP CHIP 0805 10U 10V Y5V -20~+80%	
C475	065G0805106A7Z	3	CAP CHIP 0805 10U 10V Y5V -20~+80%	
C528	065G0805106A7Z	3	CAP CHIP 0805 10U 10V Y5V -20~+80%	
C552	065G0805106A7Z	3	CAP CHIP 0805 10U 10V Y5V -20~+80%	
C558	065G0805106A7Z	3	CAP CHIP 0805 10U 10V Y5V -20~+80%	
C559	065G0805106A7Z	3	CAP CHIP 0805 10U 10V Y5V -20~+80%	
C560	065G0805106A7Z	3	CAP CHIP 0805 10U 10V Y5V -20~+80%	
C561	065G0805106A7Z	3	CAP CHIP 0805 10U 10V Y5V -20~+80%	
C563	065G0805106A7Z	3	CAP CHIP 0805 10U 10V Y5V -20~+80%	
C565	065G0805106A7Z	3	CAP CHIP 0805 10U 10V Y5V -20~+80%	
C578	065G0805106A7Z	3	CAP CHIP 0805 10U 10V Y5V -20~+80%	
C612	065G0805106A7Z	3	CAP CHIP 0805 10U 10V Y5V -20~+80%	
C724	065G0805106A7Z	3	CAP CHIP 0805 10U 10V Y5V -20~+80%	
C725	065G0805106A7Z	3	CAP CHIP 0805 10U 10V Y5V -20~+80%	
C732	065G0805106A7Z	3	CAP CHIP 0805 10U 10V Y5V -20~+80%	
C735	065G0805106A7Z	3	CAP CHIP 0805 10U 10V Y5V -20~+80%	
C736	065G0805106A7Z	3	CAP CHIP 0805 10U 10V Y5V -20~+80%	
C739	065G0805106A7Z	3	CAP CHIP 0805 10U 10V Y5V -20~+80%	
C748	065G0805106A7Z	3	CAP CHIP 0805 10U 10V Y5V -20~+80%	
C749	065G0805106A7Z	3	CAP CHIP 0805 10U 10V Y5V -20~+80%	
C750	065G0805106A7Z	3	CAP CHIP 0805 10U 10V Y5V -20~+80%	
C753	065G0805106A7Z	3	CAP CHIP 0805 10U 10V Y5V -20~+80%	
C760	065G0805106A7Z	3	CAP CHIP 0805 10U 10V Y5V -20~+80%	
C765	065G0805106A7Z	3	CAP CHIP 0805 10U 10V Y5V -20~+80%	
C766	065G0805106A7Z	3	CAP CHIP 0805 10U 10V Y5V -20~+80%	
C613	065G0805106A7Z	3	CAP CHIP 0805 10U 10V Y5V -20~+80%	
C614	065G0805106A7Z	3	CAP CHIP 0805 10U 10V Y5V -20~+80%	
C615	065G0805106A7Z	3	CAP CHIP 0805 10U 10V Y5V -20~+80%	
C616	065G0805106A7Z	3	CAP CHIP 0805 10U 10V Y5V -20~+80%	
C617	065G0805106A7Z	3	CAP CHIP 0805 10U 10V Y5V -20~+80%	
C633	065G0805106A7Z	3	CAP CHIP 0805 10U 10V Y5V -20~+80%	
C654	065G0805106A7Z	3	CAP CHIP 0805 10U 10V Y5V -20~+80%	
C688	065G0805106A7Z	3	CAP CHIP 0805 10U 10V Y5V -20~+80%	
C689	065G0805106A7Z	3	CAP CHIP 0805 10U 10V Y5V -20~+80%	
C706	065G0805106A7Z	3	CAP CHIP 0805 10U 10V Y5V -20~+80%	
C710	065G0805106A7Z	3	CAP CHIP 0805 10U 10V Y5V -20~+80%	
C722	065G0805106A7Z	3	CAP CHIP 0805 10U 10V Y5V -20~+80%	

Downloaded from www.Manualslib.com manuals search engine

C723	065G0805106A7Z	3	CAP CHIP 0805 10U 10V Y5V -20~+80%	
C101	065G0805106A7Z	3	CAP CHIP 0805 10U 10V Y5V -20~+80%	
C156	065G0805106A7Z	3	CAP CHIP 0805 10U 10V Y5V -20~+80%	
C168	065G0805106A7Z	3	CAP CHIP 0805 10U 10V Y5V -20~+80%	
C176	065G0805106A7Z	3	CAP CHIP 0805 10U 10V Y5V -20~+80%	
C222	065G0805106A7Z	3	CAP CHIP 0805 10U 10V Y5V -20~+80%	
C231	065G0805106A7Z	3	CAP CHIP 0805 10U 10V Y5V -20~+80%	
C237	065G0805106A7Z	3	CAP CHIP 0805 10U 10V Y5V -20~+80%	
C264	065G0805106A7Z	3	CAP CHIP 0805 10U 10V Y5V -20~+80%	
C282	065G0805106A7Z	3	CAP CHIP 0805 10U 10V Y5V -20~+80%	
C286	065G0805106A7Z	3	CAP CHIP 0805 10U 10V Y5V -20~+80%	
C474	065G0805106A7Z	3	CAP CHIP 0805 10U 10V Y5V -20~+80%	
C473	065G0805106A7Z	3	CAP CHIP 0805 10U 10V Y5V -20~+80%	
C472	065G0805106A7Z	3	CAP CHIP 0805 10U 10V Y5V -20~+80%	
C471	065G0805106A7Z	3	CAP CHIP 0805 10U 10V Y5V -20~+80%	
C470	065G0805106A7Z	3	CAP CHIP 0805 10U 10V Y5V -20~+80%	
C469	065G0805106A7Z	3	CAP CHIP 0805 10U 10V Y5V -20~+80%	
C465	065G0805106A7Z	3	CAP CHIP 0805 10U 10V Y5V -20~+80%	
C458	065G0805106A7Z	3	CAP CHIP 0805 10U 10V Y5V -20~+80%	
C429	065G0805106A7Z	3	CAP CHIP 0805 10U 10V Y5V -20~+80%	
C7911	065G0805106A7Z	Y	CAP CHIP 0805 10UF Z 10V Y5V	
C7932	065G0805106A7Z	Y	CAP CHIP 0805 10UF Z 10V Y5V	
C7928	065G0805106A7Z	Y	CAP CHIP 0805 10UF Z 10V Y5V	
C7927	065G0805106A7Z	Y	CAP CHIP 0805 10UF Z 10V Y5V	
C7926	065G0805106A7Z	Y	CAP CHIP 0805 10UF Z 10V Y5V	
C581	065G080547412K	Y	CAP CHIP 0805 470N 16V X7R +/-10%	
C121	065G0805475A2K	3	CAP CHIP 4.7UF 10V X7R +/- 10%	
C241	065G0805475A2K	3	CAP CHIP 4.7UF 10V X7R +/- 10%	
C242	065G0805475A2K	3	CAP CHIP 4.7UF 10V X7R +/- 10%	
C251	065G0805475A2K	3	CAP CHIP 4.7UF 10V X7R +/- 10%	
C252	065G0805475A2K	3	CAP CHIP 4.7UF 10V X7R +/- 10%	
C254	065G0805475A2K	3	CAP CHIP 4.7UF 10V X7R +/- 10%	
C301	065G0805475A2K	3	CAP CHIP 4.7UF 10V X7R +/- 10%	
C305	065G0805475A2K	3	CAP CHIP 4.7UF 10V X7R +/- 10%	
C319	065G0805475A2K	3	CAP CHIP 4.7UF 10V X7R +/- 10%	
C329	065G0805475A2K	3	CAP CHIP 4.7UF 10V X7R +/- 10%	
C462	065G0805475A2K	3	CAP CHIP 4.7UF 10V X7R +/- 10%	
C7839	065G0805475A2K	3	CAP CHIP 4.7UF 10V X7R +/- 10%	
C7804	065G0805475A2K	3	CAP CHIP 4.7UF 10V X7R +/- 10%	
C740	065G0805475A2K	3	CAP CHIP 4.7UF 10V X7R +/- 10%	
C709	065G0805475A2K	3	CAP CHIP 4.7UF 10V X7R +/- 10%	
C705	065G0805475A2K	3	CAP CHIP 4.7UF 10V X7R +/- 10%	
C702	065G0805475A2K	3	CAP CHIP 4.7UF 10V X7R +/- 10%	
C608	065G0805475A2K	3	CAP CHIP 4.7UF 10V X7R +/- 10%	
C547	065G0805475A2K	3	CAP CHIP 4.7UF 10V X7R +/- 10%	
C542	065G0805475A2K	3	CAP CHIP 4.7UF 10V X7R +/- 10%	
C515	065G0805475A2K	3	CAP CHIP 4.7UF 10V X7R +/- 10%	
C511	065G0805475A2K	3	CAP CHIP 4.7UF 10V X7R +/- 10%	
C463	065G0805475A2K	3	CAP CHIP 4.7UF 10V X7R +/- 10%	
C7837	065G120610612K	3	CHIP 10UF 16V X7R 10%	
C506	065G120610612K	3	CHIP 10UF 16V X7R 10%	
C525	065G120610612K	3	CHIP 10UF 16V X7R 10%	
C759	065G1206226A5K	T	CAP CHIP1206 22UF K 10V X5R	
C591	065G120647432K	Y	CER 1206 470N 50V X7R +/-10%	

Downloaded from www.Manualslib.com manuals search engine

C7847	065G120647522K T	CAP CHIP 1206 4.7UF K 25V X7R	
C640	065G120668437M Y	CER 1206 680N 50V Y5V +/-20%	
C635	065G120668437M Y	CER 1206 680N 50V Y5V +/-20%	
C7904	065G121010622K T	CHIP 10UF 25V X7R 10%	
C229	065T040210505K Y	CAP CHIP 0402 1UF 6V3 X5R +/-10%	
C580	067G 3111003CT	EC SMD 10UF 16V HV 4X5.5MM	
C540	067G 3111013CT	EC 100UF 16V HV 6.3X5.5MM	
C266	067T 3114713CT	EC SMD 470UF 16V HV 8X10MM	
U201	070GHDCP500HDC	HDCP CODE	
FB613	071G 56121 M	CHIP BEAD 0805 120OHM +-25% 3A	
FB614	071G 56121 M	CHIP BEAD 0805 120OHM +-25% 3A	
FB615	071G 56121 M	CHIP BEAD 0805 120OHM +-25% 3A	
FB616	071G 56121 M	CHIP BEAD 0805 120OHM +-25% 3A	
FB506	071G 56A221 TA	IND FXD 0805 EMI 100MHZ 220R R	
FB509	071G 56A221 TA	IND FXD 0805 EMI 100MHZ 220R R	
FB706	071G 56A221 TA	IND FXD 0805 EMI 100MHZ 220R R	
FB707	071G 56A221 TA	IND FXD 0805 EMI 100MHZ 220R R	
FB708	071G 56A221 TA	IND FXD 0805 EMI 100MHZ 220R R	
FB778	071G 56A221 TA	IND FXD 0805 EMI 100MHZ 220R R	
FB779	071G 56A221 TA	IND FXD 0805 EMI 100MHZ 220R R	
FB780	071G 56A221 TA	IND FXD 0805 EMI 100MHZ 220R R	
FB773	071G 56A221 TA	IND FXD 0805 EMI 100MHZ 220R R	
FB785	071G 56G301 MA	CHIP BEAD 0805 300OHM 4A	
FB751	071G 56G301 MA	CHIP BEAD 0805 300OHM 4A	
FB101	071G 56K121 TA	CHIP BEAD 120R/6000MA HCB2012KF-121T60	
FB100	071G 56K121 TA	CHIP BEAD 120R/6000MA HCB2012KF-121T60	
FB207	071G 59A121 TA	CHIP BEAD 120R/3000MA HCB1608KF-121T30	
L759	071G 59B121 K	CHIP BEAD 120 OHM 0603	
R343	071G 59C600 M	CHIP BEAD 60 OHM 0603 600MA	
FB790	071G 59C600 M	CHIP BEAD 60 OHM 0603 600MA	
FB775	071G 59C600 M	CHIP BEAD 60 OHM 0603 600MA	
FB774	071G 59C600 M	CHIP BEAD 60 OHM 0603 600MA	
FB786	071G 59C601 TA	CHIP BEAD 600R/200MA FCM1608K-601T02	
L110	071G 59C800	1HIP BEAD	
L109	071G 59C800	1HIP BEAD	
L108	071G 59C800	1HIP BEAD	
L107	071G 59C800	1HIP BEAD	
L106	071G 59C800	1HIP BEAD	
L105	071G 59C800	1HIP BEAD	
L104	071G 59C800	1HIP BEAD	
L103	071G 59C800	1HIP BEAD	
L101	071G 59C800	1HIP BEAD	
FB784	071G 59G301	CHIP BEAD 300OHM	
FB783	071G 59G301	CHIP BEAD 300OHM	
FB209	071G 59G301	CHIP BEAD 300OHM	
FB208	071G 59G301	CHIP BEAD 300OHM	
FB104	071G 59G301	CHIP BEAD 300OHM	
FB206	071G 59Q121 M	CHIP BEAD 120R/500MA MGLB1608E121T-LF	
FB205	071G 59Q121 M	CHIP BEAD 120R/500MA MGLB1608E121T-LF	
FB204	071G 59Q121 M	CHIP BEAD 120R/500MA MGLB1608E121T-LF	
FB401	071G 59Q121 M	CHIP BEAD 120R/500MA MGLB1608E121T-LF	
FB403	071G 59Q121 M	CHIP BEAD 120R/500MA MGLB1608E121T-LF	
FB404	071G 59Q121 M	CHIP BEAD 120R/500MA MGLB1608E121T-LF	
FB415	071G 59Q121 M	CHIP BEAD 120R/500MA MGLB1608E121T-LF	

Downloaded from www.Manualslib.com manuals search engine

FB416	071G 59Q121 M	CHIP BEAD 120R/500MA MGLB1608E121T-LF	
FB501	071G 59Q121 M	CHIP BEAD 120R/500MA MGLB1608E121T-LF	
FB502	071G 59Q121 M	CHIP BEAD 120R/500MA MGLB1608E121T-LF	
FB503	071G 59Q121 M	CHIP BEAD 120R/500MA MGLB1608E121T-LF	
FB504	071G 59Q121 M	CHIP BEAD 120R/500MA MGLB1608E121T-LF	
FB505	071G 59Q121 M	CHIP BEAD 120R/500MA MGLB1608E121T-LF	
FB508	071G 59Q121 M	CHIP BEAD 120R/500MA MGLB1608E121T-LF	
FB512	071G 59Q121 M	CHIP BEAD 120R/500MA MGLB1608E121T-LF	
FB513	071G 59Q121 M	CHIP BEAD 120R/500MA MGLB1608E121T-LF	
FB789	071G 59Q121 M	CHIP BEAD 120R/500MA MGLB1608E121T-LF	
FB702	071G 59Q121 M	CHIP BEAD 120R/500MA MGLB1608E121T-LF	
FB703	071G 59Q121 M	CHIP BEAD 120R/500MA MGLB1608E121T-LF	
FB704	071G 59Q121 M	CHIP BEAD 120R/500MA MGLB1608E121T-LF	
FB705	071G 59Q121 M	CHIP BEAD 120R/500MA MGLB1608E121T-LF	
FB608	071G 59Q121 M	CHIP BEAD 120R/500MA MGLB1608E121T-LF	
FB609	071G 59Q121 M	CHIP BEAD 120R/500MA MGLB1608E121T-LF	
FB610	071G 59Q121 M	CHIP BEAD 120R/500MA MGLB1608E121T-LF	
FB611	071G 59Q121 M	CHIP BEAD 120R/500MA MGLB1608E121T-LF	
FB612	071G 59Q121 M	CHIP BEAD 120R/500MA MGLB1608E121T-LF	
FB701	071G 59Q121 M	CHIP BEAD 120R/500MA MGLB1608E121T-LF	
FB301	071G 59Q121 M	CHIP BEAD 120R/500MA MGLB1608E121T-LF	
FB302	071G 59Q121 M	CHIP BEAD 120R/500MA MGLB1608E121T-LF	
FB203	071G 59Q121 M	CHIP BEAD 120R/500MA MGLB1608E121T-LF	
FB202	071G 59Q121 M	CHIP BEAD 120R/500MA MGLB1608E121T-LF	
FB201	071G 59Q121 M	CHIP BEAD 120R/500MA MGLB1608E121T-LF	
FB505	071G 59Q121 T	CHIP BEAD 120R/500MA MMZ1608S121CT	
FB504	071G 59Q121 T	CHIP BEAD 120R/500MA MMZ1608S121CT	
FB503	071G 59Q121 T	CHIP BEAD 120R/500MA MMZ1608S121CT	
FB502	071G 59Q121 T	CHIP BEAD 120R/500MA MMZ1608S121CT	
FB501	071G 59Q121 T	CHIP BEAD 120R/500MA MMZ1608S121CT	
FB416	071G 59Q121 T	CHIP BEAD 120R/500MA MMZ1608S121CT	
FB415	071G 59Q121 T	CHIP BEAD 120R/500MA MMZ1608S121CT	
FB404	071G 59Q121 T	CHIP BEAD 120R/500MA MMZ1608S121CT	
FB403	071G 59Q121 T	CHIP BEAD 120R/500MA MMZ1608S121CT	
FB401	071G 59Q121 T	CHIP BEAD 120R/500MA MMZ1608S121CT	
FB302	071G 59Q121 T	CHIP BEAD 120R/500MA MMZ1608S121CT	
FB301	071G 59Q121 T	CHIP BEAD 120R/500MA MMZ1608S121CT	
FB206	071G 59Q121 T	CHIP BEAD 120R/500MA MMZ1608S121CT	
FB205	071G 59Q121 T	CHIP BEAD 120R/500MA MMZ1608S121CT	
FB508	071G 59Q121 T	CHIP BEAD 120R/500MA MMZ1608S121CT	
FB787	071G 59Q121 T	CHIP BEAD 120R/500MA MMZ1608S121CT	
FB789	071G 59Q121 T	CHIP BEAD 120R/500MA MMZ1608S121CT	
FB705	071G 59Q121 T	CHIP BEAD 120R/500MA MMZ1608S121CT	
FB704	071G 59Q121 T	CHIP BEAD 120R/500MA MMZ1608S121CT	
FB703	071G 59Q121 T	CHIP BEAD 120R/500MA MMZ1608S121CT	
FB702	071G 59Q121 T	CHIP BEAD 120R/500MA MMZ1608S121CT	
FB701	071G 59Q121 T	CHIP BEAD 120R/500MA MMZ1608S121CT	
FB612	071G 59Q121 T	CHIP BEAD 120R/500MA MMZ1608S121CT	
FB611	071G 59Q121 T	CHIP BEAD 120R/500MA MMZ1608S121CT	
FB610	071G 59Q121 T	CHIP BEAD 120R/500MA MMZ1608S121CT	
FB609	071G 59Q121 T	CHIP BEAD 120R/500MA MMZ1608S121CT	
FB608	071G 59Q121 T	CHIP BEAD 120R/500MA MMZ1608S121CT	
FB513	071G 59Q121 T	CHIP BEAD 120R/500MA MMZ1608S121CT	
FB512	071G 59Q121 T	CHIP BEAD 120R/500MA MMZ1608S121CT	

Downloaded from www.Manualslib.com manuals search engine

FB204	071G 59Q121 T	CHIP BEAD 120R/500MA MMZ1608S121CT	
FB203	071G 59Q121 T	CHIP BEAD 120R/500MA MMZ1608S121CT	
FB202	071G 59Q121 T	CHIP BEAD 120R/500MA MMZ1608S121CT	
FB201	071G 59Q121 T	CHIP BEAD 120R/500MA MMZ1608S121CT	
L756	073G 6318910K	0603 1.8UH +-10%	
L753	073G253S901 T	SMD CHOKE 90R/400MA ACM2012-900-2P	
L752	073G253S901 T	SMD CHOKE 90R/400MA ACM2012-900-2P	
L757	073T 6318910K	CHIP INDUCTOR 1.8UH	
L757	073T 6318910T	CHIP INDUCTOR 1U8 10% MLF1608A1R8KT	
L201	073T 63828 T	CHIP INDUCROR 0U82 10% MLF1608DR82K	
L102	073T M58908 T	SMD INDUCTOR 27UH 20% SLF10155T-	
L111	073T M58908 T	SMD INDUCTOR 27UH 20% SLF10155T-	
CN301	088G 340 19 VT	HDMI HEADER 19P V/T	
CN752	088G 340 19 VT	HDMI HEADER 19P V/T	
CN301	088T 340 19 VD	HDMI HEADER 19P V/A	2nd source
CN752	088T 340 19 VD	HDMI HEADER 19P V/A	2nd source
D305	093G 60505	DIO SIG SM BAT54C(PHSE)R	
D614	093G 60505	DIO SIG SM BAT54C(PHSE)R	
D619	093G 64 42 P	BAV70 SOT23 BY PAN JIT	
D620	093G 64 42 P	BAV70 SOT23 BY PAN JIT	
D621	093G 64 42 P	BAV70 SOT23 BY PAN JIT	
X701	093G 22S921 C	CRYSTAL 27MHZ 20P SMD-5.0X3.2	
ZD507	093G 39S 34 T	UDZSNP5.6B ROHM	
D618	093G 64S3PH	BAS32L	
D617	093G 64S3PH	BAS32L	
D607	093G 64S3PH	BAS32L	
D606	093G 64S3PH	BAS32L	
D604	093G 64S3PH	BAS32L	
D407	093G 64S3PH	BAS32L	
D406	093G 64S3PH	BAS32L	
D601	093G 64S900 T	DIODE BAS316 SOT-323 PHILIPS	
D602	093G 64S900 T	DIODE BAS316 SOT-323 PHILIPS	
D102	093G3004 2	SR34 PAN JIT	
D103	093G3004 2	SR34 PAN JIT	
	715G3693M01000004K	MAIN BOARD PCB	
	P12T 65011	HEAT PAD (27X27X1) FOR U400	
	Q85T0150101	19-32-SHIELD-TOP	
	Q85T0151101	19-32-SHIELD-BOT	
	Q90T0197 1	HEAT SINK FOR U400	
E750	750TVG260XEB11N000	PANEL LC260WXE-SBB1 LGD KOREA	2nd source
E750	750TVG260XEB13N000	PANEL LC260WXE-SBB1 GZ LGD	2nd source
	A15T0650201CKD	BKT-BASE-SUPPORT FOR LGD	
	P15T0551101CKD	BRACKET_VESA_LGD	
	Q02G7024 1	SCREW-STOPPER	
	Q15T0666101CKD	BKT-SIDE-LGD	
	Q40G 26067216A	RATING LABEL	
	Q40G0006600 1A	SERVICE LABEL	
	Q40G581C62435A	S/N LABEL	
	Q44GE046101	EPS	
	Q44GE046201	EPS	
	Q44GE046301	EPS	
	Q44GE046401	EPS	
	Q44GE046672 3A	26" TV HAIER CARTON	
	Q45G 77 5	PE PACKING (Y1900241)	

Downloaded from www.Manualslib.com manuals search engine

	Q45G 99609 61	EPE COVER FOR MONITOR	
	Q50G 500523	CABLE TIE	
	Q52G 1285 12	BIG TAPE	
	Q85T0152101CKD	19-32-SHIELD-IO	

Downloaded from www.Manualslib.com manuals search engine

LT32A1 E32AG2NB3WH72N

Location	Part No.	Description	Remark
	052G 1185	MIDDLE TAPE (Y1200141)	
	052G 1185	MIDDLE TAPE (Y1200141)	
	052G 2191 A	PAPER TAPE	
	A34T1610 GM 1L0130	COVER IO SIDE-26/32	
	PWTV9NE1GQN6	POWER BOARD	
	040G 45762412B	CBPC LABEL	
	009G6005 1 GP	GROUND TERMINAL	
CN801	033G8021 2E U	INVERT CONNECTOR	
CN802	033G8021 2E U	INVERT CONNECTOR	
CN902	033T327812D	WAFER 12P PLUG	
	051G 6 4503	GLUE_RTV	
IC970	056G 139 7	IC EL817MC M-TYPE	
IC951	056G 139 7	IC EL817MC M-TYPE	
IC950	056G 139 7	IC EL817MC M-TYPE	
IC950	056G 139 10	IC TLP781F PHOTOCOUPLER DIP-4	
IC951	056G 139 10	IC TLP781F PHOTOCOUPLER DIP-4	
IC970	056G 139 10	IC TLP781F PHOTOCOUPLER DIP-4	
IC902	056T 379121	IC STR- A6069H DIP-8	
Q921	057G 761 7	KTD1691P	
Q921	057G 761909 T	TRANSISTOR KSD1691YSTU TO-126	
C904	063G 10747410V	0.47UF 275VAC ARCO	
C901	063G 10747410V	0.47UF 275VAC ARCO	
C802	063G210K105GCU	CAP MPH 1UF 450V 10%	
C807	063G210K105GCU	CAP MPH 1UF 450V 10%	
C910	063G210K105GCU	CAP MPH 1UF 450V 10%	
C805	065G 1K1021AT	CK45-R3AD102K-NR 1000PF / 1KV R-TYPE P	
C821	065G 1K1021AT	CK45-R3AD102K-NR 1000PF / 1KV R-TYPE P	
C801	065G 6J3096ET	CER CAP 3PF J 6KV	
C806	065G 6J3096ET	CER CAP 3PF J 6KV	
C905	065G306K4712B3	Y1 CAP 470PF +-10% 250VAC CD SERIES	
C906	065G306K4712B3	Y1 CAP 470PF +-10% 250VAC CD SERIES	
C902	065G306K6812BM	Y1 CAP 680PF 10% 250VAC KX	
C903	065G306K6812BM	Y1 CAP 680PF 10% 250VAC KX	
C924	065G306M1022B2	1000PF 400VAC/250VAC Y1	
C920	067G 42Z12115K	EC 120UF M 450V 18*45MM	
C953	067G204V331 3K	CS CAP 330UF 16V 10*12 MM	
C954	067G215P4713KV	LOW ESR EC 471UF M 16V 10*12MM	
C809	067G215P4714KV	LOW ESR EC 470UF M 25V 10*16MM	
C946	067G215P4714KV	LOW ESR EC 470UF M 25V 10*16MM	
C945	067G215P4716KV	LOW ESR EC 470UF M 35V 10*20MM	
C975	067G215P4716KV	LOW ESR EC 470UF M 35V 10*20MM	
C973	067G215P5616KV	LOW ESR EC 560UF M 35V 10*25MM	
L901	073G 174106 DN	LINE FILTER 13MH LK.TF032.A20	
L902	073G 174106 DN	LINE FILTER 13MH LK.TF032.A20	
L906	073G 174144 N	PFC CHOKE 220UH YUVA-1116	
L950	073G 253 91 L	CHOKE BY LI TA	
L951	073G 253 91 L	CHOKE BY LI TA	
L980	073G 253 91 L	CHOKE BY LI TA	
T802	080GL26T 15 N	X'FMR 840UH MIN YUVA-1094	
T801	080GL26T 16 YS	INVERTER X'FMR 10MH YS04170400	
T902	080GL37T 19 N	X'FMR 550UH 5% YUVA-1089	

Downloaded from www.Manualslib.com manuals search engine

T901	080GL52T 5 N	X'FMR 1.0MH YUVA-1068	
F901	084G 41 11 L	FUSE 5A 250V	
CN901	087G 501 48 S	AC SOCKET 3PIN + 3 HOLE	
D904	093G 52 70	DIODE 1N5408-P 3A/1000V DO-201AD	
	0Q1G 340 8106 CR3	SCREW	
	705TQ857051	Q903 ASS'Y	
Q903	057G 667 21	STP10NK70ZFP	
	0M1G1730 8120	SCREW	
HS6	Q90T6084 6	HEAT SINK	
	705TQ857064	Q803/Q810 ASS'Y	
Q810	057G 667 49	FET 2SK4086LS 11.5A/600V TO-220FI(LS)	
Q803	057G 667 49	FET 2SK4086LS 11.5A/600V TO-220FI(LS)	
Q810	057T 667 59	MOSFET FQPF12N60C 12A/600V TO-220F	
Q803	057T 667 59	MOSFET FQPF12N60C 12A/600V TO-220F	
	0M1G1730 8120	SCREW	
HS1	Q90T0001 3	HEAT SINK	
	705TQ893059	D902 ASS'Y	
D902	093G 52 56	DIODE FMN-1106S 10A/600V TO-220	
	0M1G1730 8120	SCREW	
HS7	Q90G6084 3	HEAT SINK	
	705TQ893060	D950 ASS'Y	
D950	093G 60298	DIODE SBT15006JST 15A/60V TO-220ML(LS)	
D950	093G1506 2	FMW-2156	
	0M1G1730 8120	SCREW	
HS5	Q90T0176 1	HEAT SINK	
	705TQ893061	D970/D972 ASS'Y	
D970	093G 60282	DIODE SP20100R TO-220FP	
D972	093G 60282	DIODE SP20100R TO-220FP	
D972	093G 60331	DIODE YG865C10RSC 20A/100V TO-220F	
D970	093G 60331	DIODE YG865C10RSC 20A/100V TO-220F	
	0M1G1730 8120	SCREW	
HS4	Q90T6064 1	HEAT SINK	
	705TQ951017	OIL FOR DISAPPEAR	
	705TQ957021	Q901 ASS'Y	
Q901	057G 667 54 1	TRA STF21NM60N 17A/650V TO-220FP	
	0M1G1730 8120	SCREW	
HS2	Q90T0095 2	HEAT SINK	
	705TQ961003	NR901 ASS'Y	
NR901	061G 58050 WL GP	RST NTCR 5 OHM +-15% 5A 13MM THINKING	
	Q09T 203 8	PIN FOR NR901	
	705TQ993049	BD901 ASS'Y	
BD901	093G 50460 18	D10XB60	
BD901	093G 50460 49	BRIDGE KBJ1008G 10A/800V KBJ	
	0M1G1730 10120	SCREW 42A9930016	
HS3	Q90T0174 1	HEAT SINK	
	709T3234 QM001	CONSUMPTIVE ASS'Y	
	055G 23524	WELDING FLUX WITHOUT PB	
	Q55G 100625	TIN STICK_LOW ARGENTUM	
IC901	056G 368 12	IC FAN7529MX SOP-8	
IC903	056G 379101	IC FAN7602BMX SOP-8	
IC801	056T 379122	IC OZ9976GN-C-0-TR SOP-16	
Q801	057G 417 4	PMBS3904/PHILIPS-SMT(04)	
Q802	057G 417 4	PMBS3904/PHILIPS-SMT(04)	
Q950	057G 417 4	PMBS3904/PHILIPS-SMT(04)	

Downloaded from www.Manualslib.com manuals search engine

Q970	057G 417 4	PMBS3904/PHILIPS-SMT(04)	
Q950	057G 417518	TRA LMBT3904LT1G 200MA/40V SOT-23 LRC	
Q970	057G 417518	TRA LMBT3904LT1G 200MA/40V SOT-23 LRC	
Q802	057G 417518	TRA LMBT3904LT1G 200MA/40V SOT-23 LRC	
Q801	057G 417518	TRA LMBT3904LT1G 200MA/40V SOT-23 LRC	
Q804	057G 759 2	RK7002FD5T116 SOT-23 BY ROHM	
Q924	057G 760 5	DTC144WKA BY ROHM SMT	
Q801	057G 761 18 T	TRA SST2222A SST3 ROHM	
Q802	057G 761 18 T	TRA SST2222A SST3 ROHM	
Q804	057G 763511	MOSFET SRK7002LT1G SOT-23 LRC	
R932	061G0805100 T	RST CHIP 10R 1/8W 5%	
R809	061G0805101	1ST CHIPR 100 OHM +-5% 1/8W	
R981	061G0805101	1ST CHIPR 100 OHM +-5% 1/8W	
R802	061G0805101	1ST CHIPR 100 OHM +-5% 1/8W	
R807	061G0805101	1ST CHIPR 100 OHM +-5% 1/8W	
R986	061G0805102	RST CHIPR 1K OHM +-5% 1/8W	
R983	061G0805102	RST CHIPR 1K OHM +-5% 1/8W	
R982	061G0805102	RST CHIPR 1K OHM +-5% 1/8W	
R956	061G0805102	RST CHIPR 1K OHM +-5% 1/8W	
R955	061G0805102	RST CHIPR 1K OHM +-5% 1/8W	
R826	061G0805102 Y	RST CHIPR 1KOHM +-5% 1/8W YAGEO	
R834	061G0805103	RST CHIPR 10K OHM +-5% 1/8W	
R833	061G0805103	RST CHIPR 10K OHM +-5% 1/8W	
R829	061G0805103	RST CHIPR 10K OHM +-5% 1/8W	
R914	061G0805103	RST CHIPR 10K OHM +-5% 1/8W	
R918	061G0805103	RST CHIPR 10K OHM +-5% 1/8W	
R942	061G0805103	RST CHIPR 10K OHM +-5% 1/8W	
R944	061G0805103	RST CHIPR 10K OHM +-5% 1/8W	
R815	061G0805103 Y	RST CHIPR 10KOHM +-5% 1/8W YAGEO	
R835	061G0805104	RST CHIPR 100K OHM +-5% 1/8W	
R928	061G0805104	RST CHIPR 100K OHM +-5% 1/8W	
R828	061G0805105	RST CHIPR 1M OHM +-5% 1/8W	
R830	061G0805105 Y	RST CHIPR 1MOHM +-5% 1/8W YAGEO	
R933	061G0805109	RST CHIPR 1 OHM +-5% 1/8W	
R923	061G0805130 2F	RST CHIP 13K 1/8W 1%	
R827	061G0805152	RST CHIPR 1.5 KOHM +-5% 1/8W	
R806	061G0805153 Y	RST CHIPR 15KOHM +-5% 1/8W YAGEO	
R813	061G0805153 Y	RST CHIPR 15KOHM +-5% 1/8W YAGEO	
R979	061G0805200 1F	RST CHIPR 2 KOHM +-1% 1/8W	
R964	061G0805202	RST CHIPR 2K OHM +-5% 1/8W	
R824	061G0805204 Y	RST CHIPR 200KOHM +-5% 1/8W YAGEO	
R943	061G0805220	RST CHIPR 22 OHM +-5% 1/8W	
R978	061G0805240 2F	RST CHIPR 24 KOHM +-1% 1/8W	
R913	061G0805270 Y	RST CHIPR 27 OHM +-5% 1/8W YAGEO	
R987	061G0805270 2F	RST CHIPR 27 KOHM +-1% 1/8W	
R817	061G0805335	3.3M 0805	
R975	061G0805392	3.9 KOHM 1/10W	
R836	061G0805394 Y	RST CHIPR 390KOHM +-5% 1/8W YAGEO	
R915	061G0805470 0F	RST CHIPR 470 OHM +-1% 1/8W	
R937	061G0805472	RST CHIPR 4.7 KOHM +-5% 1/8W	
R938	061G0805472	RST CHIPR 4.7 KOHM +-5% 1/8W	
R985	061G0805472	RST CHIPR 4.7 KOHM +-5% 1/8W	
R825	061G0805513	RST CHIPR 51K OHM +-5% 1/8W	
R906	061G0805560 3F	RST CHIPR 560 KOHM +-1% 1/8W	

Downloaded from www.Manualslib.com manuals search engine

R917	061G0805563	RST CHIPR 56K OHM +-5% 1/8W	
R958	061G0805750 1F	RST CHIPR 7.5 KOHM +-1% 1/8W	
R816	061G0805750 2F	RST CHIPR 75 KOHM +-1% 1/8W	
R818	061G0805754 Y	RST CHIPR 750KOHM +-5% 1/8W YAGEO	
R957	061G0805820 1F	RST CHIPR 8.2KOHM +-1% 1/8W	
R801	061G0805823 JF	RST CHIPR 82KOHM +-5% 1/8W FENGHUA	
R808	061G0805823 JF	RST CHIPR 82KOHM +-5% 1/8W FENGHUA	
R822	061G0805824 Y	RST CHIPR 820KOHM +-5% 1/8W YAGEO	
JR801	061G1206000	RST CHIP MAX 0R05 1/4W	
JR802	061G1206000	RST CHIP MAX 0R05 1/4W	
JR803	061G1206000	RST CHIP MAX 0R05 1/4W	
JR901	061G1206000	RST CHIP MAX 0R05 1/4W	
JR902	061G1206000	RST CHIP MAX 0R05 1/4W	
JR903	061G1206000	RST CHIP MAX 0R05 1/4W	
JR904	061G1206000	RST CHIP MAX 0R05 1/4W	
JR905	061G1206000	RST CHIP MAX 0R05 1/4W	
JR906	061G1206000	RST CHIP MAX 0R05 1/4W	
JR907	061G1206000	RST CHIP MAX 0R05 1/4W	
JR908	061G1206000	RST CHIP MAX 0R05 1/4W	
JR909	061G1206000	RST CHIP MAX 0R05 1/4W	
JR910	061G1206000	RST CHIP MAX 0R05 1/4W	
R924	061G1206100 4F	RST CHIPR 1 MOHM +-1% 1/4W	
R925	061G1206100 4F	RST CHIPR 1 MOHM +-1% 1/4W	
R926	061G1206100 4F	RST CHIPR 1 MOHM +-1% 1/4W	
R977	061G1206101	RST CHIPR 100 OHM +-5% 1/4W	
R973	061G1206101	RST CHIPR 100 OHM +-5% 1/4W	
R970	061G1206101	RST CHIPR 100 OHM +-5% 1/4W	
R954	061G1206101	RST CHIPR 100 OHM +-5% 1/4W	
R951	061G1206101	RST CHIPR 100 OHM +-5% 1/4W	
R935	061G1206102	RST CHIPR 1K OHM +-5% 1/4W	
R945	061G1206102	RST CHIPR 1K OHM +-5% 1/4W	
R974	061G1206102	RST CHIPR 1K OHM +-5% 1/4W	
R976	061G1206103	RST CHIPR 10K OHM +-5% 1/4W	
R941	061G1206103	RST CHIPR 10K OHM +-5% 1/4W	
R939	061G1206103	RST CHIPR 10K OHM +-5% 1/4W	
R929	061G1206103	RST CHIPR 10K OHM +-5% 1/4W	
R832	061G1206103	RST CHIPR 10K OHM +-5% 1/4W	
R831	061G1206103	RST CHIPR 10K OHM +-5% 1/4W	
R996	061G1206104	RST CHIPR 100 KOHM +-5% 1/4W	
R997	061G1206104	RST CHIPR 100 KOHM +-5% 1/4W	
R998	061G1206104	RST CHIPR 100 KOHM +-5% 1/4W	
R999	061G1206104	RST CHIPR 100 KOHM +-5% 1/4W	
R821	061G1206105	1M 1206	
R820	061G1206105 Y	RST CHIPR 1MOHM +-5% 1/4W YAGEO	
R904	061G1206155	RST CHIPR 1.5 MOHM +-5% 1/4W	
R905	061G1206155	RST CHIPR 1.5 MOHM +-5% 1/4W	
R909	061G1206155	RST CHIPR 1.5 MOHM +-5% 1/4W	
R965	061G1206182	RST CHIPR 1.8 KOHM +-5% 1/4W	
R967	061G1206182	RST CHIPR 1.8 KOHM +-5% 1/4W	
R971	061G1206182	RST CHIPR 1.8 KOHM +-5% 1/4W	
R972	061G1206182	RST CHIPR 1.8 KOHM +-5% 1/4W	
R984	061G1206182	RST CHIPR 1.8 KOHM +-5% 1/4W	
R988	061G1206182	RST CHIPR 1.8 KOHM +-5% 1/4W	
R911	061G1206203	RST CHIPR 20 KOHM +-5% 1/4W	

Downloaded from www.Manualslib.com manuals search engine

R907	061G1206229	RST CHIPR 2.2 OHM +-5% 1/4W	
R908	061G1206229	RST CHIPR 2.2 OHM +-5% 1/4W	
R931	061G1206229	RST CHIPR 2.2 OHM +-5% 1/4W	
R819	061G12062702FF	RST CHIPR 27KOHM +-1% 1/4W FENGHUA	
R910	061G1206304	RST CHIPR 300K OHM +-5% 1/4W	
R901	061G1206334	RST CHIPR 330KOHM +-5% 1/4W	
R902	061G1206334	RST CHIPR 330KOHM +-5% 1/4W	
R903	061G1206334	RST CHIPR 330KOHM +-5% 1/4W	
R952	061G1206470	RST CHIPR 47 OHM +-5% 1/4W	
R950	061G1206470	RST CHIPR 47 OHM +-5% 1/4W	
R962	061G1206475	RST CHIPR 4.7 MOHM +-5% 1/4W	
R947	061G1206622	RST CHIPR 6.2 KOHM +-5% 1/4W	
R920	061G1206680 3F	RST CHIPR 680KOHM +-1% 1/4W	
R921	061G1206680 3F	RST CHIPR 680KOHM +-1% 1/4W	
R922	061G1206680 3F	RST CHIPR 680KOHM +-1% 1/4W	
R989	061G1206682	RST CHIPR 6.8 KOHM +-5% 1/4W	
R969	061G1206682	RST CHIPR 6.8 KOHM +-5% 1/4W	
R968	061G1206682	RST CHIPR 6.8 KOHM +-5% 1/4W	
R966	061G1206682	RST CHIPR 6.8 KOHM +-5% 1/4W	
R805	061G1206750	RST CHIPR 75 OHM +-5% 1/4W	
R812	061G1206750	RST CHIPR 75 OHM +-5% 1/4W	
R803	061T1206560	RST CHIPR 56 OHM +-5% 1/4W	
R804	061T1206560	RST CHIPR 56 OHM +-5% 1/4W	
R810	061T1206560	RST CHIPR 56 OHM +-5% 1/4W	
R811	061T1206560	RST CHIPR 56 OHM +-5% 1/4W	
C912	065G080510132K Y	CAP CHIP 0805 100PF K 50V X7R	
C812	065G080510232K Y	CAP CHIP 0805 1N 50V X7R +/-10%	
C820	065G080510232K Y	CAP CHIP 0805 1N 50V X7R +/-10%	
C819	065G080510332K Y	CAP CHIP 0805 10N 50V X7R +/-10%	
C909	065G080510332K Y	CAP CHIP 0805 10N 50V X7R +/-10%	
C810	065G080510422K Y	CAP CHIP 0805 100N 25V X7R +/-10%	
C978	065G080510432K Y	CAP CHIP 0805 100N 50V X7R +/-10%	
C956	065G080510432K Y	CAP CHIP 0805 100N 50V X7R +/-10%	
C949	065G080510432K Y	CAP CHIP 0805 100N 50V X7R +/-10%	
C948	065G080510432K Y	CAP CHIP 0805 100N 50V X7R +/-10%	
C947	065G080510432K Y	CAP CHIP 0805 100N 50V X7R +/-10%	
C942	065G080510432K Y	CAP CHIP 0805 100N 50V X7R +/-10%	
C934	065G080510432K Y	CAP CHIP 0805 100N 50V X7R +/-10%	
C816	065G080510432K Y	CAP CHIP 0805 100N 50V X7R +/-10%	
C907	065G080510432K Y	CAP CHIP 0805 100N 50V X7R +/-10%	
C908	065G080510432K Y	CAP CHIP 0805 100N 50V X7R +/-10%	
C913	065G080510432K Y	CAP CHIP 0805 100N 50V X7R +/-10%	
C921	065G080510432K Y	CAP CHIP 0805 100N 50V X7R +/-10%	
C923	065G080510432K Y	CAP CHIP 0805 100N 50V X7R +/-10%	
C815	065G080510522K T	CAP CHIP 0805 1UF K 25V X7R	
C922	065G080510522K T	CAP CHIP 0805 1UF K 25V X7R	
C944	065G080522132K Y	CAP CHIP 0805 220P 50V X7R +/-10%	
C955	065G080522432K Y	CAP CHIP 0805 0.22UF K 50V X7R	
C803	065G080522522K M	MLCC 0805 CAP 2.2UF 25V X7R	
C813	065G080522522K M	MLCC 0805 CAP 2.2UF 25V X7R	
C804	065G080533131J Y	CAP CHIP 0805 330PF J 50V NPO	
C808	065G080533131J Y	CAP CHIP 0805 330PF J 50V NPO	
C811	065G080533131J Y	CAP CHIP 0805 330PF J 50V NPO	
C976	065G080533432K Y	CAP CHIP 0805 330N 50V X7R +/-10%	

Downloaded from www.Manualslib.com manuals search engine

C817	065G080547222K Y	CAP CHIP 0805 4700PF K 25V X7R	
C822	065G080547332K Y	CAP CHIP 0805 47N 50V X7R +/-10%	
C823	065G080547332K Y	CAP CHIP 0805 47N 50V X7R +/-10%	
C917	065G080547332K Y	CAP CHIP 0805 47N 50V X7R +/-10%	
C943	065G080547332K Y	CAP CHIP 0805 47N 50V X7R +/-10%	
C918	065G080547422K T	CAP CHIP 0805 0.47UF K 25V X7R	
C814	065G080568231J 3	CAP CHIP 0805 6N8 50V NPO +/-5%	
C950	065G120610272K Y	CAP CHIP 1206 1NF K 500V X7R	
C951	065G120610272K Y	CAP CHIP 1206 1NF K 500V X7R	
C952	065G120610272K Y	CAP CHIP 1206 1NF K 500V X7R	
C957	065G120610272K Y	CAP CHIP 1206 1NF K 500V X7R	
C940	065G120622272K 3	CER 1206 2N2 500V X7R 10%	
C935	065G120622272K 3	CER 1206 2N2 500V X7R 10%	
C970	065G120622272K Y	CAP CHIP 1206 2200PF K 500V X7R	
C972	065G120622272K Y	CAP CHIP 1206 2200PF K 500V X7R	
C818	065G120622522K M	CER 1206 2U2 25V X7R 10%	
D971	093G 64 39 R	DIODE 1SS355 TE11 SOD-323	
D951	093G 64 39 R	DIODE 1SS355 TE11 SOD-323	
D906	093G 64 39 R	DIODE 1SS355 TE11 SOD-323	
D903	093G 64 39 R	DIODE 1SS355 TE11 SOD-323	
D805	093G 64 42 PP	BAV70 SOT-23	
D806	093G 64 42 PP	BAV70 SOT-23	
D940	093G 52S 10 T	DIODE US1M-E3/61T 1A/1000V DO-214AC	
D801	093T 60S 5 T	SCS0520P SOD-123	
D802	093T 60S 5 T	SCS0520P SOD-123	
D803	093T 60S 5 T	SCS0520P SOD-123	
D804	093T 60S 5 T	SCS0520P SOD-123	
	709T3234 QS001	CONSUMPTIVE ASS'Y	
A1	006G 31 4	1.7MM RIVET	
A4	006G 31 4	1.7MM RIVET	
A5	006G 31 4	1.7MM RIVET	
A8	006G 31 4	1.7MM RIVET	
CN901	006G 31500 GP	EYELET	
L906	006G 31502	1.5MM RIVET	
IC952	056G 158 12	KIA431A-AT/P TO-92	
IC971	056G 158 12	KIA431A-AT/P TO-92	
Q925	057G 420 3 T	TRA KTA1273-Y- AT/ P_TO-92L KEC	
R948	061G 30310852T GP	FUSE RESISTOR	
R949	061G 30310852T GP	FUSE RESISTOR	
R960	061G 60210252T	CFR 1K OHM +-5% 1/6W	
R961	061G 60210352T	CFR 10KOHM +-5% 1/6W	
R963	061G 60210352T	CFR 10KOHM +-5% 1/6W	
R946	061G152M43852T	RST MOF 0R43 5% 2W	
R940	061G208M10452T	RST MOF 100K 5% 1W	
R916	061T152M10852T SY	RST MOF 0R1 5% 2W	
C930	065G 2K222 2T6921	CAP CER 2200PF K 2KV Y5P	
C931	067G215A1017KT	EC 100UF 50V 8*12MM	
C933	067G215Y1007KT	KY50VB10M-TP5 5*11.5	
C937	067G215Y1007KT	KY50VB10M-TP5 5*11.5	
C941	067G215Y1007KT	KY50VB10M-TP5 5*11.5	
C914	067G215Y4707KT	47UF 50V	
FB903	071G 55 23 S	BEAD	
FB901	071G 55 26 S	FERRITE CORE	
FB902	071G 55 26 S	FERRITE CORE	

Downloaded from www.Manualslib.com manuals search engine

FB901	071T 55 26 H	FERRITE BEAD 3.5*6.0*0.8	
FB902	071T 55 26 H	FERRITE BEAD 3.5*6.0*0.8	
ZD930	093G 3916652T	MTZJ15B (13.89-14.62)	
ZD952	093G 3916652T	MTZJ15B (13.89-14.62)	
ZD970	093G 3917152T	TZJ T-72 30B	
D901	093G 52 1552T	DIODE 1N4007-E3/73 1A/1000V DO-41	
D931	093G 5250S52T	DIODE AU02Z-V1 SANKEN	
D808	093G 64 1152T	1N4148	
D807	093G 64 1152T	1N4148	
ZD952	093G 39G 5	DIODE MTZJ15B DO-34	
ZD930	093G 39G 5	DIODE MTZJ15B DO-34	
ZD970	093G 39G 9	DIODE MTZJ30B DO-34	
D930	093T1080 252T	DIODE SARSO1-V1 SANKEN	
J916	095G 90 23	JUMPER WIRE	
J915	095G 90 23	JUMPER WIRE	
J914	095G 90 23	JUMPER WIRE	
J913	095G 90 23	JUMPER WIRE	
J912	095G 90 23	JUMPER WIRE	
J911	095G 90 23	JUMPER WIRE	
J910	095G 90 23	JUMPER WIRE	
J909	095G 90 23	JUMPER WIRE	
J908	095G 90 23	JUMPER WIRE	
J917	095G 90 23	JUMPER WIRE	
J918	095G 90 23	JUMPER WIRE	
J919	095G 90 23	JUMPER WIRE	
J920	095G 90 23	JUMPER WIRE	
J925	095G 90 23	JUMPER WIRE	
J923	095G 90 23	JUMPER WIRE	
J924	095G 90 23	JUMPER WIRE	
J922	095G 90 23	JUMPER WIRE	
J921	095G 90 23	JUMPER WIRE	
J907	095G 90 23	JUMPER WIRE	
J801	095G 90 23	JUMPER WIRE	
J802	095G 90 23	JUMPER WIRE	
J803	095G 90 23	JUMPER WIRE	
J804	095G 90 23	JUMPER WIRE	
J805	095G 90 23	JUMPER WIRE	
J806	095G 90 23	JUMPER WIRE	
J807	095G 90 23	JUMPER WIRE	
J808	095G 90 23	JUMPER WIRE	
J809	095G 90 23	JUMPER WIRE	
J810	095G 90 23	JUMPER WIRE	
J811	095G 90 23	JUMPER WIRE	
J812	095G 90 23	JUMPER WIRE	
J901	095G 90 23	JUMPER WIRE	
J902	095G 90 23	JUMPER WIRE	
J903	095G 90 23	JUMPER WIRE	
J904	095G 90 23	JUMPER WIRE	
J905	095G 90 23	JUMPER WIRE	
J906	095G 90 23	JUMPER WIRE	
	709T3234 QA001	CONSUMPTIVE ASS'Y	
E715	715G3234P01H30003M	POWER BOARD PCB	
E715	715G3234P01H30003S	POWER BOARD PCB	2nd source
	Q40G2010 26001	IO SIDE LABEL	

Downloaded from www.Manualslib.com manuals search engine

	Q45G 88525T26	AIR BUBBLE BAG	
	Q45G 88525T28	PE BAG	
	Q45G 88525T31	PE BAG	
	Q45G 99606 25 ESD	INSULATING PE BAG	
	Q45G 99606 25 ESD	INSULATING PE BAG	
	Q52T 1150522	TAPE_INSULATING	
	Q85T0153101CKD	19-32-SIDE-BKT	
	052G 1185	MIDDLE TAPE (Y1200141)	
	705TQ949001	COMSUPTIVE ASS'Y-A4	
	040G 581689 4A	BARCODE LABEL FOR 1	
	040G 581689 4A	BARCODE LABEL FOR 1	
	052G 1186	SMALL TAPE	
	052G 1207 A	CONDUCTIVE TAPE 45MM *25MM *0.08MM	
	052G 1211 B	CONDUCTIVE TAPE 85MM *40MM *0.09MM	
	052G 2191 A	PAPER TAPE	
	085T 583113	GASKET	
	089G404A18N IS	POWER CORD	
	092TB1JX1A3WGM	BATTERY FOR ALL EXPORT MODE LR03	
ECN100	095G801312X 65	HARNESS 12P-12P 300MM	
ECN750	095G8018 3DH99	LVDS CABLE 30P-30P 290MM	
ECN750	095G8018 3XH99	LVDS CABLE 30P-30P 290MM	2nd source
ECN801	095G8019 3E 4	HARNESS 3P-2P 260MM	2nd source
ECN801	095G8019 3X 4	HARNESS 3P-2P 300MM	
	098GRABDUNTHRJ	REMOTE CONTROL FOR HAIER USB	
	0M1G 930 8 47 CR3	SCREW	
	0M1G 940 6120	SCREW (M4X6)	
	0M1G 940 12 47 CR3	SCREW	
	0M1G1730 6120	SCREW,42-D020523	
	0M1G1730 10120	SCREW 42A9930016	
	0M1G1740 10120	SCREW 42A9940008	
	0Q1G 930 8 47 CR3	SCREW	
	0Q1G 940 12 47 CR3	SCREW	
	0Q1G 940 12 47 CR3	SCREW	
	0Q1G 940 16 47 CR3	SCREW	
	705TQ94109A	MANUAL ASS'Y	
	Q40G000267225A	HOTLINE LABEL	
	Q41G19MV672 1A	MANUAL	
	Q41G783067211A	WARRANTY CARD	
	Q41G78SV67227A	QSG	
	Q45G2010M0201A	PE BAG	
	040G 58162435A	P/N LABEL FOR MANUAL PE BAG	
	040G 58162435A	P/N LABEL FOR MANUAL PE BAG	
	705TQ9SKJ38	32" HAIER STAND ASS'Y	
	0M1G6050 1	SCREW	
	A34T0975 GM 1L0100	STAND-SWIVEL 32-9A	
	A34T0976 GM 1L0100	STAND-NECK 32-9A	
	Q02T7015 1	NUT	
M037	Q37T0134011	HINGE	
M037	SQ37T0134011	HINGE ASS'Y	
	028F0845110	SHAFT	
	034F0975 1101A	TOP-PLASTIC	
	A34F0976 GM 1L	BOTTOM-PLASTIC	
	002F7015 1	NUT	
	004F081510T 00	WASHER	

Downloaded from www.Manualslib.com manuals search engine

	004F180820M 00	WASHER	
	004F1808104 00	WASHER	
	004F1808104 01	WASHER	
	004F122515M 00	WASHER	
	705TQ9SKJ39	32" HAIER BASE ASS'Y	
	0Q1G 130 8 47 CR3	SCREW	
	A15T0643101	32TV BKT_BASE-1	
	A34T1051 GM 1L0100	BASE	
	Q12G6300 25 1	RUBBER FOOT	
	705TQ9SKJ40	32" HAIER SKD ASS'Y	
SP01	078G 522 1B K	SPK 8 OHM 12W 160X42MM KUAIDA	
SP01	078G 522 1B Y	SPK 8 OHM 12W 160X42MM SUNLINK	
ECN391	095G801410D634	HARNESS 10P-6P+3P 360/600MM	2nd source
ECN391	095G801410W634	HARNESS 10P-6P+3P 360/600MM	
ECN501	095T8014 4D545	WIRE HARNESS 4P(PLUG)-B&R+B&W	
	0Q1G 930 6120	SCREW 3X6MM	
	0Q1G 940 14 47 CR3	SCREW	
	0Q1G1030 6120	SCREW	
	705TQ934JQ1	REAR COVER ASS'Y 32"	
	A15T0282201	BKT-VESA-BTM	
	A34T0974 GM 2A0130	REAR COVER 32-9A	
	Q36T 600 18113	CLOTH_GRIDDING	
	Q36T 600 18114	CLOTH_GRIDDING	
	Q36T 600 40 1	NONWOVEN FABRIC	
	705TQ934JR1	BEZEL ASS'Y 32"	
	A33T0536 GME1L0100	KEY HOLDER	
	A33T0537 QV 1L0100	KEY PAD	
	A33T0562 ED 1C0100	IR LENS	
	A33T0563 1 1C0100	POWER LENS	
	A34T1050 GMA1L0130	BEZEL TV32-9A1	
	KEPF9QAK	KEY BOARD	
CN001	033G8032 3F HR	CONNECTOR 3P 1.25	
R005	061G06031102FY	RST CHIPR 11KOHM +-1% 1/10W YAGEO	
R001	061G06031102FY	RST CHIPR 11KOHM +-1% 1/10W YAGEO	
R007	061G06031801FY	RST CHIPR 1.8KOHM +-1% 1/10W YAGEO	
R003	061G06031801FY	RST CHIPR 1.8KOHM +-1% 1/10W YAGEO	
R006	061G06034301FT	RST CHIP 4K3 1/10W 1%	
R002	061G06034301FT	RST CHIP 4K3 1/10W 1%	
R004	061G06034700FT	RST CHIP 470R 1/10W 1%	
C002	065G060310422K F	CAP CHIP 0603 0.1UF K 25V X7R	
C001	065G060310422K F	CAP CHIP 0603 0.1UF K 25V X7R	
SW04	077G 607 2 FD	CHIP TACT SW BY FORWARD SFKQGMA2125T-PL	
SW05	077G 607 2 FD	CHIP TACT SW BY FORWARD SFKQGMA2125T-PL	
SW06	077G 607 2 FD	CHIP TACT SW BY FORWARD SFKQGMA2125T-PL	
SW07	077G 607 2 FD	CHIP TACT SW BY FORWARD SFKQGMA2125T-PL	
SW01	077G 607 2 FD	CHIP TACT SW BY FORWARD SFKQGMA2125T-PL	
SW02	077G 607 2 FD	CHIP TACT SW BY FORWARD SFKQGMA2125T-PL	
SW03	077G 607 2 FD	CHIP TACT SW BY FORWARD SFKQGMA2125T-PL	
ZD001	093G 64 37 N	VPORT0603100KV05	

Downloaded from www.Manualslib.com manuals search engine

ZD002	093G 64 37 N	VPORT0603100KV05	
E715	715G3293K01001004S	KEY BOARD PCB	
E715	715G3293K01001004W	KEY BOARD PCB	2nd source
	Q44T3231 21 27	EVA WASHER	
	Q44T3231 21 28	EVA WASHER	
	A34T1612 GM 1A0130	COVER IO BACK	
	IRPF9QAQ	IR BOARD	
U101	056G 627911	IR 38KHZ KSM-603TM2M	
CN101	033G8032 6F HR	CONNECTOR	
R104	061G0603330 JT	RST CHIP 33R 1/10W 5% TZAI YUAN	
R103	061G0603330 JT	RST CHIP 33R 1/10W 5% TZAI YUAN	
R102	061G0603330 JT	RST CHIP 33R 1/10W 5% TZAI YUAN	
R101	061G0603330 JT	RST CHIP 33R 1/10W 5% TZAI YUAN	
R105	061G0603332 JF	RST CHIPR 3.3KOHM 5% 1/10W FENGHUA	
C101	065G060310132K Y	CAP CHIP 0603 100PF K 50V X7R	
C103	065G060310432K 3	CAP CHIP 0603 0.1UF K 50V X7R	
C102	065G0805106A7Z 3	CAP CHIP 0805 10U 10V Y5V -20~+80%	
LED101	081G 14 24 EL	CHIP LED BLUE/DARK RED	
	715G3478R01001004S	IR BOARD PCB	
	Q01G6070 1	SCREW	
	Q40G2010 26100	IO LABEL	
	705TQASCJ02001	MAIN BOARD ASS'Y	
	756TQACB 2B005 01	MAIN BOARD-CBPF92KBQLS	
U715	056G1133 34	M24C02-WMN6TP	
U304	056G1133 34	M24C02-WMN6TP	
U402	056G1133 34	M24C02-WMN6TP	
U201	056G113353A	IC M24C32-WMN6T SO-8 ST	
U302	056G1133923 1	IC MX25L4005AM2I-12G SOP-8	
U301	056G1133945	IC HY27US08281A-TPCB TSOP48	
CBPF-U301	100TZKGK011B11	MCU ASS'Y-056G1133945	
SMTF-U302	100TZKGK012B11	MCU ASS'Y-056G1133923 1	
SMTF-U201	100TZKGK013B11	MCU ASS'Y-056G113353A	
SMTF-U715	100TZKGKA08B1E	MCU ASS'Y-056G1133 34	
SMTF-U304	100TZKGKB08B1E	MCU ASS'Y-056G1133 34	
SMTF-U402	100TZKGKV08B1E	MCU ASS'Y-056G1133 34	
	040G 45762412B	CBPC LABEL	
CN501	033G3802 4B Y L	CONN 2.0 4P	
CN750	033G8027 30	WAFER 30P 2.0MM DIP DUAL ROW	
CN100	033T327812D	WAFER 12P PLUG	
CN203	033T3802 3E X	WAFER 2.0MM 3P	
CN501	033T3802 4B Y	CONNECTOR	
CN391	033T380210B Y	CONNECTOR	
C684	067G 2154714KT	EC 470UF 25V ED 10X12MM	
C630	067G 2154714KT	EC 470UF 25V ED 10X12MM	
C279	067G215C4714RV	EC ZLH 470UF 25V 10*12.5	
C149	067G215C4714RV	EC ZLH 470UF 25V 10*12.5	
C593	067G215H221 3C	EC 220UF 16V SY 8X7MM	
C592	067G215H221 3C	EC 220UF 16V SY 8X7MM	
C584	067G215S3316KV	EC 330UF M 35V 10*12MM	
C583	067G215S3316KV	EC 330UF M 35V 10*12MM	
C143	067G215Y4713RV	LOW E.S.R 470UF +-20% 16V	
C134	067G215Y4713RV	LOW E.S.R 470UF +-20% 16V	
C125	067G215Y4713RV	LOW E.S.R 470UF +-20% 16V	
L600	073G 253178 L	CHOKE COIL 22UH+-25% CC-005184	

Downloaded from www.Manualslib.com manuals search engine

L601	073G 253178 L	CHOKE COIL 22UH+-25% CC-005184	
CN407	088G 78 13934 C	RCA JACK 1*3 Y/W/R AV3-8.4-13-1	
CN407	088G 78 13934 YG	RCA JACK 1*3 Y/W/R RCA-314E-011	
CN502	088G 30211K	PHONE JACK 5PIN	
CN201	088G 352 2 YG	USB CONNECTOR USB4-01	
CN201	088G 352 21CL	USB CONN TYPE A	
CN753	088G 35521U C	SCART CONN. 21P V/T RGB21-V16-2011	
CN401	088G 35521U C	SCART CONN. 21P V/T RGB21-V16-2011	
CN401	088G 35521UYGO	SCART CONN. 21P V/T RC-2119-02	
CN753	088G 35521UYGO	SCART CONN. 21P V/T RC-2119-02	
CN701	088G 500903 P	PCMCIA CONN. CPC-ALNSCH0	
CN403	088T 78 1360C	RCA JACK 1*3 G/BL/R V/A	
CN404	088T 78 13935 S	RCA JACK 1*3 W/R/B V/A 2PJ1535-001111	
CN404	088T 78 13A35 YG	RCA JACK 1*3 W/R/B V/A RCA-346D-01	
CN403	088T 78 13A36 YG	RCA JACK 1*3 G/BL/R V/A RCA-346D-02	
CN405	088T 30252C	PHONE JACK 3.5MM 3P V/A GREEN	
CN405	088T 302A17 YG	PHONE JACK 3.5MM 3P V/T GREEN	
CN406	088T 35315FVSC	D-SUB 15PIN VERTICAL CONN WITH SCREW	
CN406	088T 35315FVSD	D-SUB 15PIN VERTICAL CONNECTOR	2nd source
X202	093G 22923 C	CRYSTAL 54M 10P HC-49S	
TU501	094G DVB T 9P	TUNER DVB-T FQD1116ME/BH-TPV	2nd source
C752	067G 2151014PT	EC 105℃ CAP 100UF M 25V	
C7903	067G 3051007CT	EC 10UF/50V KM 5*11MM	
C228	067G 3051012CT	EC 100UF 10V KM 5X11MM	
C161	067G 3051012CT	EC 100UF 10V KM 5X11MM	
C132	067G 3051012CT	EC 100UF 10V KM 5X11MM	
C131	067G 3051012CT	EC 100UF 10V KM 5X11MM	
C619	067G 3051012CT	EC 100UF 10V KM 5X11MM	
C7827	067G 3051012CT	EC 100UF 10V KM 5X11MM	
C464	067G 3051012CT	EC 100UF 10V KM 5X11MM	
C268	067G 3052207XT	105℃ 22UF +-20% 50V	
C114	067G 3053312CT	EC 330UF 10V KM 6.3X11MM	
C698	067G 3053313PT	E.C 330UF M 16V 8*12	
C642	067G 305470 4T	CAP EC 47UF/25 M 5*11 105C DI	
C7823	067G215A4712KT	EC 470UF 10V 8*12.5MM	
C7947	067G215Y4704KT	EC CAP.105 C	
C7824	067G305S4712CT	EC 470UF 10V KW 8X9MM	
C695	067G515A4704CT	EC 47UF 25V GF 5*11MM	
C7939	067G515A4704CT	EC 47UF 25V GF 5*11MM	
C697	067G515A4704CT	EC 47UF 25V GF 5*11MM	
U712	056G 133 23 R	BA17809FP-E2	
U158	056G 1331PH	IC LD1117S18 SOT-223	
U105	056G 379115	IC AP1538SG-13 SOP-8L	
U400	056G 562283	IC MT5360BMU/B LQFP-256	
U152	056G 563129	IC AME8810-AEGTZ 0.6A/3.3V SOT-223	
U203	056G 563143	IC G1084T43UF TO-252	
U153	056G 563152	IC G1117T43UF TO-252	
U711	056G 581 9	IC G5250K1T1U SOT23-5	
U200	056G 615 67	IC NT5TU32M16CG-25C 512MB BGA-84	
U718	056G 623906	IC NLASB3157DFT2G SC-88	
U713	056G 623906	IC NLASB3157DFT2G SC-88	
U720	056G 634 26	IC PI3HDMI301ZLEX QFN-64	
U406	056G 643 35	IC MAX809STRG 2.93V SOT23-3	
U310	056G 662 10	IC RCLAMP0524P.TCT	

Downloaded from www.Manualslib.com manuals search engine

U402	056G1133 34	M24C02-WMN6TP	
U304	056G1133 34	M24C02-WMN6TP	
U715	056G1133 34	M24C02-WMN6TP	
U201	056G113353A	IC M24C32-WMN6T SO-8 ST	
U302	056G1133923 1	IC MX25L4005AM2I-12G SOP-8	
U301	056G1133945	IC HY27US08281A-TPCB TSOP48	
U707	056T 563949	IC LD39080PT-R PPAK	
U153	056T 563951	IC LD1117ADT-TR DPAK	
U104	056T 563951	IC LD1117ADT-TR DPAK	
U157	056T 563956	IC AME5106AIHAADJZ SOP8	
U707	056T 563957	IC LD29150PTR PPAK	
U605	056T 593 34	IC MT8292 QFN-48	
U600	056T 616912	IC TDA8933BTW HTSSOP32	
U713	056T 623904	IC TS5A3157DCKR SC70	
U718	056T 623904	IC TS5A3157DCKR SC70	
U702	056T1126 40	IC MT8295AE LQFP-128	
Q783	057G 417 18 T	PMBT3904 SOT-23	
Q782	057G 417 18 T	PMBT3904 SOT-23	
Q773	057G 417 18 T	PMBT3904 SOT-23	
Q751	057G 417 18 T	PMBT3904 SOT-23	
Q750	057G 417 18 T	PMBT3904 SOT-23	
Q608	057G 417 18 T	PMBT3904 SOT-23	
Q606	057G 417 18 T	PMBT3904 SOT-23	
Q604	057G 417 18 T	PMBT3904 SOT-23	
Q401	057G 417 18 T	PMBT3904 SOT-23	
Q302	057G 417 18 T	PMBT3904 SOT-23	
Q203	057G 417 18 T	PMBT3904 SOT-23	
Q704	057G 417512	MMBT3906	
Q703	057G 417512	MMBT3906	
Q702	057G 417512	MMBT3906	
Q701	057G 417512	MMBT3906	
Q605	057G 417512	MMBT3906	
Q101	057G 419513	BC847C	
Q151	057G 419513	BC847C	
Q776	057G 419911 T	TRA 2A/12V 2SD2653K SOT-346	
Q151	057G 477900 T	TRA SIG SM BC847C (KEC0) R	
Q101	057G 477900 T	TRA SIG SM BC847C (KEC0) R	
Q601	057G 477904 T	TRA BC847BW 100MA/45V SOT-323	
Q607	057G 477904 T	TRA BC847BW 100MA/45V SOT-323	
Q502	057G 760900	DIGITAL TR DTC623TK SMT3	
Q503	057G 760900	DIGITAL TR DTC623TK SMT3	
Q602	057G 760900	DIGITAL TR DTC623TK SMT3	
Q603	057G 760900	DIGITAL TR DTC623TK SMT3	
Q769	057G 760900	DIGITAL TR DTC623TK SMT3	
Q771	057G 760900	DIGITAL TR DTC623TK SMT3	
Q779	057G 760900	DIGITAL TR DTC623TK SMT3	
Q780	057G 760900	DIGITAL TR DTC623TK SMT3	
Q150	057G 763112	MOS SI5403DC-T1-GE3 30V/6A	
Q104	057G 7631PH	FET POW SM SI5441DC(VISH)R	
Q774	057T 417 18 T	PMBT3904 SOT-23	
Q775	057T 417 18 T	PMBT3904 SOT-23	
Q781	057T 419911 T	TRA 2A/12V 2SD2653K SOT-346	
TH201	061G 56A050 WT	SMD PTC 0.5A KMC3S050RY 1206	
R502	061G0402000 JT	RST CHIPR MAX0R05 1/16W TZAI YUAN	

Downloaded from www.Manualslib.com manuals search engine

R600	061G0402000 JT	RST CHIPR MAX0R05 1/16W TZAI YUAN	
R618	061G0402000 JT	RST CHIPR MAX0R05 1/16W TZAI YUAN	
R662	061G0402000 JT	RST CHIPR MAX0R05 1/16W TZAI YUAN	
R696	061G0402000 JT	RST CHIPR MAX0R05 1/16W TZAI YUAN	
R771	061G0402000 JT	RST CHIPR MAX0R05 1/16W TZAI YUAN	
R772	061G0402000 JT	RST CHIPR MAX0R05 1/16W TZAI YUAN	
R773	061G0402000 JT	RST CHIPR MAX0R05 1/16W TZAI YUAN	
R7810	061G0402000 JT	RST CHIPR MAX0R05 1/16W TZAI YUAN	
R7877	061G0402000 JT	RST CHIPR MAX0R05 1/16W TZAI YUAN	
R7878	061G0402000 JT	RST CHIPR MAX0R05 1/16W TZAI YUAN	
R7879	061G0402000 JT	RST CHIPR MAX0R05 1/16W TZAI YUAN	
R1052	061G0402000 JT	RST CHIPR MAX0R05 1/16W TZAI YUAN	
R1078	061G0402000 JT	RST CHIPR MAX0R05 1/16W TZAI YUAN	
R1089	061G0402000 JT	RST CHIPR MAX0R05 1/16W TZAI YUAN	
R1096	061G0402000 JT	RST CHIPR MAX0R05 1/16W TZAI YUAN	
R1128	061G0402000 JT	RST CHIPR MAX0R05 1/16W TZAI YUAN	
R237	061G0402000 JT	RST CHIPR MAX0R05 1/16W TZAI YUAN	
R238	061G0402000 JT	RST CHIPR MAX0R05 1/16W TZAI YUAN	
R411	061G0402000 JT	RST CHIPR MAX0R05 1/16W TZAI YUAN	
R412	061G0402000 JT	RST CHIPR MAX0R05 1/16W TZAI YUAN	
R413	061G0402000 JT	RST CHIPR MAX0R05 1/16W TZAI YUAN	
R415	061G0402000 JT	RST CHIPR MAX0R05 1/16W TZAI YUAN	
R447	061G0402000 JT	RST CHIPR MAX0R05 1/16W TZAI YUAN	
R7880	061G0402000 JT	RST CHIPR MAX0R05 1/16W TZAI YUAN	
R7905	061G0402000 JT	RST CHIPR MAX0R05 1/16W TZAI YUAN	
R7906	061G0402000 JT	RST CHIPR MAX0R05 1/16W TZAI YUAN	
R7935	061G0402000 JT	RST CHIPR MAX0R05 1/16W TZAI YUAN	
R7936	061G0402000 JT	RST CHIPR MAX0R05 1/16W TZAI YUAN	
R7959	061G0402000 JT	RST CHIPR MAX0R05 1/16W TZAI YUAN	
R7814	061G0402000 JY	RST CHIPR 0 OHM +-5% 1/16W YAGEO	
R498	061G04021000FY	RST CHIP 100R 1/16W 1%	
R414	061G04021000FY	RST CHIP 100R 1/16W 1%	
R1097	061G04021000FY	RST CHIP 100R 1/16W 1%	
R1090	061G04021000FY	RST CHIP 100R 1/16W 1%	
R1079	061G0402101 JT	RST CHIP 100R 1/16W 5% TZAI YUAN	
R633	061G0402101 JT	RST CHIP 100R 1/16W 5% TZAI YUAN	
R621	061G0402101 JT	RST CHIP 100R 1/16W 5% TZAI YUAN	
R619	061G0402101 JT	RST CHIP 100R 1/16W 5% TZAI YUAN	
R450	061G0402101 JT	RST CHIP 100R 1/16W 5% TZAI YUAN	
R433	061G0402101 JT	RST CHIP 100R 1/16W 5% TZAI YUAN	
R214	061G0402101 JT	RST CHIP 100R 1/16W 5% TZAI YUAN	
R1123	061G0402101 JT	RST CHIP 100R 1/16W 5% TZAI YUAN	
R7831	061G0402101 JY	RST CHIPR 100 OHM +-5% 1/16W YAGEO	
R7832	061G0402101 JY	RST CHIPR 100 OHM +-5% 1/16W YAGEO	
R7964	061G0402101 JY	RST CHIPR 100 OHM +-5% 1/16W YAGEO	
R1154	061G0402103 JF	RST CHIPR 10KOHM +-5% 1/16W FENGHUA	
R1153	061G0402103 JF	RST CHIPR 10KOHM +-5% 1/16W FENGHUA	
R1152	061G0402103 JF	RST CHIPR 10KOHM +-5% 1/16W FENGHUA	
R1136	061G0402103 JF	RST CHIPR 10KOHM +-5% 1/16W FENGHUA	
R1056	061G0402103 JT	RST CHIP 10K 1/16W 5% TZAI YUAN	
R226	061G0402103 JT	RST CHIP 10K 1/16W 5% TZAI YUAN	
R7813	061G0402103 JT	RST CHIP 10K 1/16W 5% TZAI YUAN	
R7902	061G0402104 JW	RST CHIPR 100KOHM +-5% 1/16W WALSIN	
R556	061G0402104 JY	RST CHIPR 100KOHM +-5% 1/16W YAGEO	

Downloaded from www.Manualslib.com manuals search engine

R557	061G0402104 JY	RST CHIPR 100KOHM +-5% 1/16W YAGEO	
R7960	061G0402104 JY	RST CHIPR 100KOHM +-5% 1/16W YAGEO	
R209	061G0402151 JF	RST CHIPR 150 OHM +-5% 1/16W FENGHUA	
R441	061G0402152 JT	RST CHIP 1K5 1/16W 5% TZAI YUAN	
R501	061G0402152 JT	RST CHIP 1K5 1/16W 5% TZAI YUAN	
R7822	061G0402201 JT	RST CHIP 200R 1/16W 5% TZAI YUAN	
R7824	061G0402201 JT	RST CHIP 200R 1/16W 5% TZAI YUAN	
R782	061G0402222 Y	RST CHIPR 2.2KOHM +-5% 1/16W YAGEO	
R784	061G0402222 Y	RST CHIPR 2.2KOHM +-5% 1/16W YAGEO	
R785	061G0402222 Y	RST CHIPR 2.2KOHM +-5% 1/16W YAGEO	
R780	061G0402222 JT	RST CHIP 2K2 1/16W 5% TZAI YUAN	
R782	061G0402222 JT	RST CHIP 2K2 1/16W 5% TZAI YUAN	
R784	061G0402222 JT	RST CHIP 2K2 1/16W 5% TZAI YUAN	
R785	061G0402222 JT	RST CHIP 2K2 1/16W 5% TZAI YUAN	
R7931	061G0402223 JT	RST CHIP 22K 1/16W 5% TZAI YUAN	
R634	061G0402223 JT	RST CHIP 22K 1/16W 5% TZAI YUAN	
R612	061G0402223 JT	RST CHIP 22K 1/16W 5% TZAI YUAN	
R460	061G0402273 JW	RST CHIP 27K 1/16W 5% WALSIN	
R459	061G0402273 JW	RST CHIP 27K 1/16W 5% WALSIN	
R458	061G0402273 JW	RST CHIP 27K 1/16W 5% WALSIN	
R457	061G0402273 JW	RST CHIP 27K 1/16W 5% WALSIN	
R456	061G0402273 JW	RST CHIP 27K 1/16W 5% WALSIN	
R455	061G0402273 JW	RST CHIP 27K 1/16W 5% WALSIN	
R454	061G0402273 JW	RST CHIP 27K 1/16W 5% WALSIN	
R453	061G0402273 JW	RST CHIP 27K 1/16W 5% WALSIN	
R1104	061G0402273 JW	RST CHIP 27K 1/16W 5% WALSIN	
R1103	061G0402273 JW	RST CHIP 27K 1/16W 5% WALSIN	
R206	061G0402330 JT	RST CHIP 33R 1/16W 5% TZAI YUAN	
R205	061G0402330 JT	RST CHIP 33R 1/16W 5% TZAI YUAN	
R1130	061G0402331 JT	RST CHIP 330R 1/16W 5% TZAI YUAN	
R371	061G0402331 JY	RST CHIPR 330 OHM +-5% 1/16W YAGEO	
R635	061G0402393 JW	RST CHIP 39K 1/16W 5% WALSIN	
R770	061G0402470 JW	RST CHIP 47R 1/16W 5% WALSIN	
R1137	061G0402472 JF	RST CHIPR 4.7KOHM +-5% 1/16W FENGHUA	
R1145	061G0402472 JF	RST CHIPR 4.7KOHM +-5% 1/16W FENGHUA	
R1149	061G0402472 JF	RST CHIPR 4.7KOHM +-5% 1/16W FENGHUA	
R1148	061G0402472 JF	RST CHIPR 4.7KOHM +-5% 1/16W FENGHUA	
R1138	061G0402472 JF	RST CHIPR 4.7KOHM +-5% 1/16W FENGHUA	
R1140	061G0402472 JF	RST CHIPR 4.7KOHM +-5% 1/16W FENGHUA	
R1141	061G0402472 JF	RST CHIPR 4.7KOHM +-5% 1/16W FENGHUA	
R1144	061G0402472 JF	RST CHIPR 4.7KOHM +-5% 1/16W FENGHUA	
R399	061G0402472 JT	RST CHIP 4K7 1/16W 5% TZAI YUAN	
R7930	061G0402472 JT	RST CHIP 4K7 1/16W 5% TZAI YUAN	
R533	061G0402472 JT	RST CHIP 4K7 1/16W 5% TZAI YUAN	
R699	061G0402472 JY	RST CHIPR 4.7KOHM +-5% 1/16W YAGEO	
R7961	061G0402472 JY	RST CHIPR 4.7KOHM +-5% 1/16W YAGEO	
R7963	061G0402472 JY	RST CHIPR 4.7KOHM +-5% 1/16W YAGEO	
R7965	061G0402472 JY	RST CHIPR 4.7KOHM +-5% 1/16W YAGEO	
R1108	061G0402473 JW	RST CHIP 47K 1/16W 5% WALSIN	
R1119	061G0402473 JW	RST CHIP 47K 1/16W 5% WALSIN	
R698	061G0402473 JW	RST CHIP 47K 1/16W 5% WALSIN	
R697	061G0402473 JW	RST CHIP 47K 1/16W 5% WALSIN	
R609	061G0402473 JY	RST CHIPR 47KOHM +-5% 1/16W YAGEO	
R625	061G0402473 JY	RST CHIPR 47KOHM +-5% 1/16W YAGEO	

Downloaded from www.Manualslib.com manuals search engine

R7962	061G0402473 JY	RST CHIPR 47KOHM +-5% 1/16W YAGEO	
R406	061G04025600FT	RST CHIP 560R 1/16W 1%	
R1107	061G0402561 JF	RST CHIP 560R 1/16W 5% FENGHUA	
R1116	061G0402561 JF	RST CHIP 560R 1/16W 5% FENGHUA	
R7894	061G0402561 JF	RST CHIP 560R 1/16W 5% FENGHUA	
R7895	061G0402561 JF	RST CHIP 560R 1/16W 5% FENGHUA	
R470	061G0402680 JT	RST CHIP 68R 1/16W 5% TZAI YUAN	
R471	061G0402680 JT	RST CHIP 68R 1/16W 5% TZAI YUAN	
R428	061G0402680 JT	RST CHIP 68R 1/16W 5% TZAI YUAN	
R432	061G0402680 JT	RST CHIP 68R 1/16W 5% TZAI YUAN	
R436	061G0402680 JT	RST CHIP 68R 1/16W 5% TZAI YUAN	
R468	061G0402680 JT	RST CHIP 68R 1/16W 5% TZAI YUAN	
R443	061G0402681 JW	RST CHIP 680R 1/16W 5% WALSIN	
R442	061G0402681 JW	RST CHIP 680R 1/16W 5% WALSIN	
R448	061G04026819FY	RST CHIP 68.1R 1/16W 1% YAGEO	
R451	061G04026819FY	RST CHIP 68.1R 1/16W 1% YAGEO	
R452	061G04026819FY	RST CHIP 68.1R 1/16W 1% YAGEO	
R1053	061G0402750 JT	RST CHIPR 75 OHM +-5% 1/16W TZAI YUAN	
R1080	061G0402750 JT	RST CHIPR 75 OHM +-5% 1/16W TZAI YUAN	
R210	061G0402750 JT	RST CHIPR 75 OHM +-5% 1/16W TZAI YUAN	
R211	061G0402750 JT	RST CHIPR 75 OHM +-5% 1/16W TZAI YUAN	
R417	061G04027509FY	RST CHIPR 75 OHM +-1% 1/16W YAGEO	
R439	061G04027509FY	RST CHIPR 75 OHM +-1% 1/16W YAGEO	
R444	061G04027509FY	RST CHIPR 75 OHM +-1% 1/16W YAGEO	
R445	061G04027509FY	RST CHIPR 75 OHM +-1% 1/16W YAGEO	
R446	061G04027509FY	RST CHIPR 75 OHM +-1% 1/16W YAGEO	
R465	061G04027509FY	RST CHIPR 75 OHM +-1% 1/16W YAGEO	
R466	061G04027509FY	RST CHIPR 75 OHM +-1% 1/16W YAGEO	
R467	061G04027509FY	RST CHIPR 75 OHM +-1% 1/16W YAGEO	
R1098	061G04027509FY	RST CHIPR 75 OHM +-1% 1/16W YAGEO	
R1091	061G04027509FY	RST CHIPR 75 OHM +-1% 1/16W YAGEO	
R628	061G0402822 JY	RST CHIPR 8.2KOHM +-5% 1/16W YAGEO	
R626	061G0402822 JY	RST CHIPR 8.2KOHM +-5% 1/16W YAGEO	
R639	061G0402822 JY	RST CHIPR 8.2KOHM +-5% 1/16W YAGEO	
R641	061G0402822 JY	RST CHIPR 8.2KOHM +-5% 1/16W YAGEO	
R555	061G0603000 JF	RST CHIPR MAX 0R05 1/10W FENGHUA	
R554	061G0603000 JF	RST CHIPR MAX 0R05 1/10W FENGHUA	
R552	061G0603000 JF	RST CHIPR MAX 0R05 1/10W FENGHUA	
R551	061G0603000 JF	RST CHIPR MAX 0R05 1/10W FENGHUA	
R464	061G0603000 JT	RST CHIP MAX 0R05 1/10W TZAI YUAN	
R422	061G0603000 JT	RST CHIP MAX 0R05 1/10W TZAI YUAN	
R401	061G0603000 JT	RST CHIP MAX 0R05 1/10W TZAI YUAN	
R1133	061G0603000 JT	RST CHIP MAX 0R05 1/10W TZAI YUAN	
R1131	061G0603000 JT	RST CHIP MAX 0R05 1/10W TZAI YUAN	
R1129	061G0603000 JT	RST CHIP MAX 0R05 1/10W TZAI YUAN	
R1115	061G0603000 JT	RST CHIP MAX 0R05 1/10W TZAI YUAN	
R111	061G0603000 JT	RST CHIP MAX 0R05 1/10W TZAI YUAN	
R1106	061G0603000 JT	RST CHIP MAX 0R05 1/10W TZAI YUAN	
R523	061G0603000 JT	RST CHIP MAX 0R05 1/10W TZAI YUAN	
R1088	061G0603000 JT	RST CHIP MAX 0R05 1/10W TZAI YUAN	
R7937	061G0603000 JT	RST CHIP MAX 0R05 1/10W TZAI YUAN	
R7921	061G0603000 JT	RST CHIP MAX 0R05 1/10W TZAI YUAN	
R724	061G0603000 JT	RST CHIP MAX 0R05 1/10W TZAI YUAN	
R715	061G0603000 JT	RST CHIP MAX 0R05 1/10W TZAI YUAN	

Downloaded from www.Manualslib.com manuals search engine

R714	061G0603000 JT	RST CHIP MAX 0R05 1/10W TZAI YUAN	
R713	061G0603000 JT	RST CHIP MAX 0R05 1/10W TZAI YUAN	
R707	061G0603000 JT	RST CHIP MAX 0R05 1/10W TZAI YUAN	
R706	061G0603000 JT	RST CHIP MAX 0R05 1/10W TZAI YUAN	
R705	061G0603000 JT	RST CHIP MAX 0R05 1/10W TZAI YUAN	
R614	061G0603000 JT	RST CHIP MAX 0R05 1/10W TZAI YUAN	
R613	061G0603000 JT	RST CHIP MAX 0R05 1/10W TZAI YUAN	
R611	061G0603000 JT	RST CHIP MAX 0R05 1/10W TZAI YUAN	
R608	061G0603000 JT	RST CHIP MAX 0R05 1/10W TZAI YUAN	
R532	061G0603000 JT	RST CHIP MAX 0R05 1/10W TZAI YUAN	
R531	061G0603000 JT	RST CHIP MAX 0R05 1/10W TZAI YUAN	
R524	061G0603000 JT	RST CHIP MAX 0R05 1/10W TZAI YUAN	
R1121	061G0603100 JT	RST CHIP 10R 1/10W 5% TZAI YUAN	
R1085	061G0603100 JT	RST CHIP 10R 1/10W 5% TZAI YUAN	
R201	061G06031001FT	RST CHIP 1K 1/10W 1%	
R202	061G06031001FT	RST CHIP 1K 1/10W 1%	
R342	061G0603101 JF	RST CHIPR 100 OHM +-5% 1/10W FENGHUA	
R1076	061G0603101 JT	RST CHIP 100R 1/10W 5% TZAI YUAN	
R7933	061G0603101 JY	RST CHIPR 100 OHM +-5% 1/10W YAGEO	
R7915	061G0603101 JY	RST CHIPR 100 OHM +-5% 1/10W YAGEO	
R7912	061G0603101 JY	RST CHIPR 100 OHM +-5% 1/10W YAGEO	
R489	061G0603101 JY	RST CHIPR 100 OHM +-5% 1/10W YAGEO	
R326	061G0603101 JY	RST CHIPR 100 OHM +-5% 1/10W YAGEO	
R325	061G0603101 JY	RST CHIPR 100 OHM +-5% 1/10W YAGEO	
R259	061G0603101 JY	RST CHIPR 100 OHM +-5% 1/10W YAGEO	
R258	061G0603101 JY	RST CHIPR 100 OHM +-5% 1/10W YAGEO	
R1069	061G0603101 JY	RST CHIPR 100 OHM +-5% 1/10W YAGEO	
R1068	061G0603101 JY	RST CHIPR 100 OHM +-5% 1/10W YAGEO	
R1158	061G0603102 JF	RST CHIPR 1K OHM +-5% 1/10W FENGHUA	
R1159	061G0603102 JF	RST CHIPR 1K OHM +-5% 1/10W FENGHUA	
R1162	061G0603102 JF	RST CHIPR 1K OHM +-5% 1/10W FENGHUA	
R1163	061G0603102 JF	RST CHIPR 1K OHM +-5% 1/10W FENGHUA	
R207	061G0603102 JF	RST CHIPR 1K OHM +-5% 1/10W FENGHUA	
R793	061G0603102 JF	RST CHIPR 1K OHM +-5% 1/10W FENGHUA	
R7893	061G0603102 JF	RST CHIPR 1K OHM +-5% 1/10W FENGHUA	
R1062	061G0603102 JT	RST CHIP 1K 1/10W 5% TZAI YUAN	
R758	061G0603102 JY	RST CHIPR 1KOHM +-5% 1/10W YAGEO	
R7957	061G0603103 JF	RST CHIPR 10K OHM +-5% 1/10W FENGHUA	
R1072	061G0603103 JT	RST CHIP 10K 1/10W 5% TZAI YUAN	
R1075	061G0603103 JT	RST CHIP 10K 1/10W 5% TZAI YUAN	
R1120	061G0603103 JT	RST CHIP 10K 1/10W 5% TZAI YUAN	
R1064	061G0603103 JY	RST CHIPR 10KOHM +-5% 1/10W YAGEO	
R138	061G0603103 JY	RST CHIPR 10KOHM +-5% 1/10W YAGEO	
R158	061G0603103 JY	RST CHIPR 10KOHM +-5% 1/10W YAGEO	
R256	061G0603103 JY	RST CHIPR 10KOHM +-5% 1/10W YAGEO	
R726	061G0603103 JY	RST CHIPR 10KOHM +-5% 1/10W YAGEO	
R728	061G0603103 JY	RST CHIPR 10KOHM +-5% 1/10W YAGEO	
R731	061G0603103 JY	RST CHIPR 10KOHM +-5% 1/10W YAGEO	
R732	061G0603103 JY	RST CHIPR 10KOHM +-5% 1/10W YAGEO	
R733	061G0603103 JY	RST CHIPR 10KOHM +-5% 1/10W YAGEO	
R734	061G0603103 JY	RST CHIPR 10KOHM +-5% 1/10W YAGEO	
R759	061G0603103 JY	RST CHIPR 10KOHM +-5% 1/10W YAGEO	
R7805	061G0603103 JY	RST CHIPR 10KOHM +-5% 1/10W YAGEO	
R7807	061G0603103 JY	RST CHIPR 10KOHM +-5% 1/10W YAGEO	

Downloaded from www.Manualslib.com manuals search engine

R7812	061G0603103 JY	RST CHIPR 10KOHM +-5% 1/10W YAGEO	
R7816	061G0603103 JY	RST CHIPR 10KOHM +-5% 1/10W YAGEO	
R7910	061G0603103 JY	RST CHIPR 10KOHM +-5% 1/10W YAGEO	
R7913	061G0603103 JY	RST CHIPR 10KOHM +-5% 1/10W YAGEO	
R725	061G0603103 JY	RST CHIPR 10KOHM +-5% 1/10W YAGEO	
R323	061G0603103 JY	RST CHIPR 10KOHM +-5% 1/10W YAGEO	
R478	061G0603103 JY	RST CHIPR 10KOHM +-5% 1/10W YAGEO	
R480	061G0603103 JY	RST CHIPR 10KOHM +-5% 1/10W YAGEO	
R503	061G0603103 JY	RST CHIPR 10KOHM +-5% 1/10W YAGEO	
R604	061G0603103 JY	RST CHIPR 10KOHM +-5% 1/10W YAGEO	
R605	061G0603103 JY	RST CHIPR 10KOHM +-5% 1/10W YAGEO	
R615	061G0603103 JY	RST CHIPR 10KOHM +-5% 1/10W YAGEO	
R681	061G0603103 JY	RST CHIPR 10KOHM +-5% 1/10W YAGEO	
R677	061G0603103 JY	RST CHIPR 10KOHM +-5% 1/10W YAGEO	
R675	061G0603103 JY	RST CHIPR 10KOHM +-5% 1/10W YAGEO	
R674	061G0603103 JY	RST CHIPR 10KOHM +-5% 1/10W YAGEO	
R652	061G0603103 JY	RST CHIPR 10KOHM +-5% 1/10W YAGEO	
R631	061G0603103 JY	RST CHIPR 10KOHM +-5% 1/10W YAGEO	
R1061	061G0603104 JT	RST CHIP 100K 1/10W 5% TZAI YUAN	
R1063	061G0603104 JT	RST CHIP 100K 1/10W 5% TZAI YUAN	
R1160	061G0603104 JT	RST CHIP 100K 1/10W 5% TZAI YUAN	
R1164	061G0603104 JT	RST CHIP 100K 1/10W 5% TZAI YUAN	
R7811	061G0603104 JT	RST CHIP 100K 1/10W 5% TZAI YUAN	
R7958	061G0603104 JT	RST CHIP 100K 1/10W 5% TZAI YUAN	
R717	061G0603105 JY	RST CHIP 1M 1/10W 5% YAGEO	
R684	061G0603105 JY	RST CHIP 1M 1/10W 5% YAGEO	
R683	061G0603105 JY	RST CHIP 1M 1/10W 5% YAGEO	
R253	061G0603109 JW	RST CHIP 1R 1/10W 5% WALSIN	
R203	061G06031100FT	RST CHIP 110R 1/10W 1%	
R110	061G06031200FY	RST CHIPR 120 OHM +-1% 1/10W YAGEO	
R151	061G06031200FY	RST CHIPR 120 OHM +-1% 1/10W YAGEO	
R154	061G06031200FY	RST CHIPR 120 OHM +-1% 1/10W YAGEO	
R774	061G06031201FY	RST CHIPR 1.2KOHM +-1% 1/10W YAGEO	
R7803	061G0603122 JF	RST CHIPR 1.2KOHM 5% 1/10W FENGHUA	
R1073	061G0603151 JF	RST CHIPR 150 OHM +-5% 1/10W FENGHUA	
R1087	061G0603151 JT	RST CHIP 150R 1/10W 5% TZAI YUAN	
R123	061G0603152 JW	RST CHIPR 1.5KOHM 1/10W WALSIN	
R106	061G06031621FY	RST CHIPR 1.62KOHM +-1% 1/10W YAGEO	
R430	061G06031829FF	RST CHIPR 18.2 OHM +-1% 1/10W FENGHUA	
R437	061G06031829FF	RST CHIPR 18.2 OHM +-1% 1/10W FENGHUA	
R438	061G06031829FF	RST CHIPR 18.2 OHM +-1% 1/10W FENGHUA	
R7890	061G06032002FF	RST CHIPR 20KOHM +-1% 1/10W FENGHUA	
R764	061G0603202 JF	RST CHIPR 2K OHM +-5% 1/10W FENGHUA	
R103	061G0603203 JF	RST CHIPR 20K OHM +-5% 1/10W FENGHUA	
R627	061G06032202FY	RST CHIPR 22KOHM +-1% 1/10W YAGEO	
R640	061G06032202FY	RST CHIPR 22KOHM +-1% 1/10W YAGEO	
R1105	061G0603222 JT	RST CHIP 2K2 1/10W 5% TZAI YUAN	
R462	061G0603222 JT	RST CHIP 2K2 1/10W 5% TZAI YUAN	
R7919	061G0603223 JF	RST CHIPR 22KOHM 5% 1/10W FENGHUA	
R102	061G06032401FY	RST CHIPR 2.4KOHM +-1% 1/10W YAGEO	
R341	061G0603241 JF	RST CHIPR 240OHM 1/10W FENGHUA	
R119	061G0603272 JF	RST CHIPR 2.7KOHM 5% 1/10W FENGHUA	
R7806	061G0603302 JF	RST CHIP 3KOHM 5% 1/10W FENGHUA	
R220	061G0603330 JY	RST CHIPR 33 OHM 1/10W YAGEO	

Downloaded from www.Manualslib.com manuals search engine

R718	061G0603330 JY	RST CHIPR 33 OHM 1/10W YAGEO	
R719	061G0603330 JY	RST CHIPR 33 OHM 1/10W YAGEO	
R721	061G0603330 JY	RST CHIPR 33 OHM 1/10W YAGEO	
R7898	061G0603330 JY	RST CHIPR 33 OHM 1/10W YAGEO	
R7920	061G0603333 JF	RST CHIPR 33KOHM 1/10W FENGHUA	
R1126	061G0603333 JT	RST CHIP 33K 1/10W 5% TZAI YUAN	
R7804	061G0603333 JT	RST CHIP 33K 1/10W 5% TZAI YUAN	
R242	061G06033921FF	RST CHIPR 3.92KOHM +-1% 1/10W FENGHUA	
R241	061G06033921FF	RST CHIPR 3.92KOHM +-1% 1/10W FENGHUA	
R7892	061G06034701FY	RST CHIPR 4.7KOHM +-1% 1/10W YAGEO	
R1070	061G0603471 JF	RST CHIPR 470OHM +-5% 1/10W FENGHUA	
R680	061G0603471 JF	RST CHIPR 470OHM +-5% 1/10W FENGHUA	
R679	061G0603471 JF	RST CHIPR 470OHM +-5% 1/10W FENGHUA	
R655	061G0603471 JF	RST CHIPR 470OHM +-5% 1/10W FENGHUA	
R654	061G0603471 JF	RST CHIPR 470OHM +-5% 1/10W FENGHUA	
R623	061G0603471 JF	RST CHIPR 470OHM +-5% 1/10W FENGHUA	
R624	061G0603471 JF	RST CHIPR 470OHM +-5% 1/10W FENGHUA	
R307	061G0603472 JT	RST CHIP 4K7 1/10W 5% TZAI YUAN	
R302	061G0603472 JT	RST CHIP 4K7 1/10W 5% TZAI YUAN	
R261	061G0603472 JT	RST CHIP 4K7 1/10W 5% TZAI YUAN	
R260	061G0603472 JT	RST CHIP 4K7 1/10W 5% TZAI YUAN	
R219	061G0603472 JT	RST CHIP 4K7 1/10W 5% TZAI YUAN	
R218	061G0603472 JT	RST CHIP 4K7 1/10W 5% TZAI YUAN	
R216	061G0603472 JT	RST CHIP 4K7 1/10W 5% TZAI YUAN	
R1165	061G0603472 JT	RST CHIP 4K7 1/10W 5% TZAI YUAN	
R1067	061G0603472 JT	RST CHIP 4K7 1/10W 5% TZAI YUAN	
R308	061G0603472 JT	RST CHIP 4K7 1/10W 5% TZAI YUAN	
R7956	061G0603472 JT	RST CHIP 4K7 1/10W 5% TZAI YUAN	
R792	061G0603472 JT	RST CHIP 4K7 1/10W 5% TZAI YUAN	
R7821	061G0603472 JT	RST CHIP 4K7 1/10W 5% TZAI YUAN	
R7820	061G0603472 JT	RST CHIP 4K7 1/10W 5% TZAI YUAN	
R761	061G0603472 JT	RST CHIP 4K7 1/10W 5% TZAI YUAN	
R730	061G0603472 JT	RST CHIP 4K7 1/10W 5% TZAI YUAN	
R727	061G0603472 JT	RST CHIP 4K7 1/10W 5% TZAI YUAN	
R723	061G0603472 JT	RST CHIP 4K7 1/10W 5% TZAI YUAN	
R722	061G0603472 JT	RST CHIP 4K7 1/10W 5% TZAI YUAN	
R716	061G0603472 JT	RST CHIP 4K7 1/10W 5% TZAI YUAN	
R659	061G0603472 JT	RST CHIP 4K7 1/10W 5% TZAI YUAN	
R365	061G0603472 JT	RST CHIP 4K7 1/10W 5% TZAI YUAN	
R322	061G0603472 JT	RST CHIP 4K7 1/10W 5% TZAI YUAN	
R321	061G0603472 JT	RST CHIP 4K7 1/10W 5% TZAI YUAN	
R317	061G0603472 JT	RST CHIP 4K7 1/10W 5% TZAI YUAN	
R315	061G0603472 JT	RST CHIP 4K7 1/10W 5% TZAI YUAN	
R311	061G0603472 JT	RST CHIP 4K7 1/10W 5% TZAI YUAN	
R310	061G0603472 JT	RST CHIP 4K7 1/10W 5% TZAI YUAN	
R1065	061G0603473 JY	RST CHIPR 47KOHM 1/10W YAGEO	
R1066	061G0603473 JY	RST CHIPR 47KOHM 1/10W YAGEO	
R1071	061G0603473 JY	RST CHIPR 47KOHM 1/10W YAGEO	
R1074	061G0603473 JY	RST CHIPR 47KOHM 1/10W YAGEO	
R121	061G0603473 JY	RST CHIPR 47KOHM 1/10W YAGEO	
R301	061G0603473 JY	RST CHIPR 47KOHM 1/10W YAGEO	
R327	061G0603473 JY	RST CHIPR 47KOHM 1/10W YAGEO	
R105	061G06035101FF	RST CHIPR 5.1KOHM +-1% 1/10W FENGHUA	
R254	061G06035101FF	RST CHIPR 5.1KOHM +-1% 1/10W FENGHUA	

Downloaded from www.Manualslib.com manuals search engine

R204	061G06035119FF	RST CHIPR 51.1 OHM +-1% 1/10W FENGHUA	
R7891	061G06035362FF	RST CHIPR 53.6KOHM +-1% 1/10W FENGHUA	
R610	061G0603560 JF	RST CHIPR 56 OHM +-5% 1/10W FENGHUA	
R606	061G0603560 JF	RST CHIPR 56 OHM +-5% 1/10W FENGHUA	
R760	061G0603562 JF	RST CHIPR 5.6KOHM 5% 1/10W FENGHUA	
R7802	061G0603562 JW	RST CHIPR 5.6KOHM +-5% 1/10W WALSIN	
R435	061G06035629FY	RST CHIPR 56.2R +-1% 1/10W YAGEO	
R431	061G06035629FY	RST CHIPR 56.2R +-1% 1/10W YAGEO	
R429	061G06035629FY	RST CHIPR 56.2R +-1% 1/10W YAGEO	
R139	061G0603621 JF	RST CHIPR 620OHM +-5% 1/10W FENGHUA	
R775	061G0603680 1F	RST CHIPR 6.8 KOHM +-1% 1/10W	
R1102	061G0603682 JT	RST CHIP 6K8 1/10W 5% TZAI YUAN	
R135	061G0603682 JT	RST CHIP 6K8 1/10W 5% TZAI YUAN	
R461	061G0603682 JT	RST CHIP 6K8 1/10W 5% TZAI YUAN	
R1122	061G0603750 JT	RST CHIP 75R 1/10W 5% TZAI YUAN	
R1125	061G0603750 JT	RST CHIP 75R 1/10W 5% TZAI YUAN	
R1127	061G0603750 JT	RST CHIP 75R 1/10W 5% TZAI YUAN	
R463	061G0603750 JT	RST CHIP 75R 1/10W 5% TZAI YUAN	
R1086	061G06037509FT	RST CHIP 75R 1/10W 1%	
R130	061G0603752 JT	RST CHIP 7K5 1/10W 5% TZAI YUAN	
R1060	061G0805000 JF	RST CHIPR 0 OHM +-5% 1/8W FENGHUA	
R1058	061G0805000 JT	RST CHIPR 0 OHM +- 5% 1/8W TZAI YUAN	
R636	061G0805100 JT	RST CHIP 10R 1/8W 5% TZAI YUAN	
R7954	061G1206000 JF	RST CHIPR MAX0R05 1/4W FENGHUA	
R7952	061G1206000 JF	RST CHIPR MAX0R05 1/4W FENGHUA	
R7950	061G1206000 JF	RST CHIPR MAX0R05 1/4W FENGHUA	
R7948	061G1206000 JF	RST CHIPR MAX0R05 1/4W FENGHUA	
R7946	061G1206000 JF	RST CHIPR MAX0R05 1/4W FENGHUA	
R7943	061G1206000 JF	RST CHIPR MAX0R05 1/4W FENGHUA	
R7940	061G1206000 JF	RST CHIPR MAX0R05 1/4W FENGHUA	
R7907	061G1206000 JF	RST CHIPR MAX0R05 1/4W FENGHUA	
R101	061G1206000 JT	RST CHIPR MAX0R05 1/4W TZAI YUAN	
R131	061G1206000 JT	RST CHIPR MAX0R05 1/4W TZAI YUAN	
R7889	061G1206000 JT	RST CHIPR MAX0R05 1/4W TZAI YUAN	
R7918	061G1206000 JT	RST CHIPR MAX0R05 1/4W TZAI YUAN	
R7939	061G1206000 JT	RST CHIPR MAX0R05 1/4W TZAI YUAN	
R632	061G1206100 JY	RST CHIPR 10 OHM +-5% 1/4W YAGEO	
R637	061G1206100 JY	RST CHIPR 10 OHM +-5% 1/4W YAGEO	
R638	061G1206220 JF	RST CHIPR 22 OHM +-5% 1/4W FENGHUA	
R629	061G1206220 JF	RST CHIPR 22 OHM +-5% 1/4W FENGHUA	
C7814	065G040210031D Y	CAP CHIP 0402 10PF D 50V NPO	
C7959	065G040210031J Y	CAP CHIP 0402 10P 50V NPO +/-5%	
C311	065G040210132K Y	CHIP 100PF 50V X7R	
C395	065G040210132K Y	CHIP 100PF 50V X7R	
C289	065G040210232K T	CAP CHIP 0402 1000PF 50V X7R	
C243	065G040210312K Y	CAP CHIP 0402 10N 16V X7R +/-10%	
C441	065G040210312K Y	CAP CHIP 0402 10N 16V X7R +/-10%	
C442	065G040210312K Y	CAP CHIP 0402 10N 16V X7R +/-10%	
C443	065G040210312K Y	CAP CHIP 0402 10N 16V X7R +/-10%	
C445	065G040210312K Y	CAP CHIP 0402 10N 16V X7R +/-10%	
C690	065G040210312K Y	CAP CHIP 0402 10N 16V X7R +/-10%	
C691	065G040210312K Y	CAP CHIP 0402 10N 16V X7R +/-10%	
C7942	065G040210312K Y	CAP CHIP 0402 10N 16V X7R +/-10%	
C7943	065G040210312K Y	CAP CHIP 0402 10N 16V X7R +/-10%	

Downloaded from www.Manualslib.com manuals search engine

C288	065G040210322K	Y	CAP CHIP 0402 10N 25V X7R +/-10%	
C402	065G040210322K	Y	CAP CHIP 0402 10N 25V X7R +/-10%	
C403	065G040210322K	Y	CAP CHIP 0402 10N 25V X7R +/-10%	
C404	065G040210322K	Y	CAP CHIP 0402 10N 25V X7R +/-10%	
C405	065G040210322K	Y	CAP CHIP 0402 10N 25V X7R +/-10%	
C412	065G040210322K	Y	CAP CHIP 0402 10N 25V X7R +/-10%	
C414	065G040210322K	Y	CAP CHIP 0402 10N 25V X7R +/-10%	
C415	065G040210322K	Y	CAP CHIP 0402 10N 25V X7R +/-10%	
C448	065G040210322K	Y	CAP CHIP 0402 10N 25V X7R +/-10%	
C606	065G040210322K	Y	CAP CHIP 0402 10N 25V X7R +/-10%	
C632	065G040210322K	Y	CAP CHIP 0402 10N 25V X7R +/-10%	
C7929	065G040210322K	Y	CAP CHIP 0402 10N 25V X7R +/-10%	
C7933	065G040210322K	Y	CAP CHIP 0402 10N 25V X7R +/-10%	
C791	065G040210332K	Y	CAP CHIP 0402 10N 50V X7R +/-10%	
C792	065G040210332K	Y	CAP CHIP 0402 10N 50V X7R +/-10%	
R414	065G040210412K	A	CAP CHIP 0402 100NF K 16V X7R	
C201	065G040210412K	A	CAP CHIP 0402 100NF K 16V X7R	
C202	065G040210412K	A	CAP CHIP 0402 100NF K 16V X7R	
C203	065G040210412K	A	CAP CHIP 0402 100NF K 16V X7R	
C205	065G040210412K	A	CAP CHIP 0402 100NF K 16V X7R	
C206	065G040210412K	A	CAP CHIP 0402 100NF K 16V X7R	
C207	065G040210412K	A	CAP CHIP 0402 100NF K 16V X7R	
C208	065G040210412K	A	CAP CHIP 0402 100NF K 16V X7R	
C209	065G040210412K	A	CAP CHIP 0402 100NF K 16V X7R	
C703	065G040210412K	A	CAP CHIP 0402 100NF K 16V X7R	
C298	065G040210412K	A	CAP CHIP 0402 100NF K 16V X7R	
C296	065G040210412K	A	CAP CHIP 0402 100NF K 16V X7R	
C295	065G040210412K	A	CAP CHIP 0402 100NF K 16V X7R	
C294	065G040210412K	A	CAP CHIP 0402 100NF K 16V X7R	
C292	065G040210412K	A	CAP CHIP 0402 100NF K 16V X7R	
C290	065G040210412K	A	CAP CHIP 0402 100NF K 16V X7R	
C287	065G040210412K	A	CAP CHIP 0402 100NF K 16V X7R	
C285	065G040210412K	A	CAP CHIP 0402 100NF K 16V X7R	
C284	065G040210412K	A	CAP CHIP 0402 100NF K 16V X7R	
C283	065G040210412K	A	CAP CHIP 0402 100NF K 16V X7R	
C273	065G040210412K	A	CAP CHIP 0402 100NF K 16V X7R	
C255	065G040210412K	A	CAP CHIP 0402 100NF K 16V X7R	
C253	065G040210412K	A	CAP CHIP 0402 100NF K 16V X7R	
C250	065G040210412K	A	CAP CHIP 0402 100NF K 16V X7R	
C249	065G040210412K	A	CAP CHIP 0402 100NF K 16V X7R	
C704	065G040210412K	A	CAP CHIP 0402 100NF K 16V X7R	
C235	065G040210412K	A	CAP CHIP 0402 100NF K 16V X7R	
C234	065G040210412K	A	CAP CHIP 0402 100NF K 16V X7R	
C233	065G040210412K	A	CAP CHIP 0402 100NF K 16V X7R	
C230	065G040210412K	A	CAP CHIP 0402 100NF K 16V X7R	
C224	065G040210412K	A	CAP CHIP 0402 100NF K 16V X7R	
C221	065G040210412K	A	CAP CHIP 0402 100NF K 16V X7R	
C219	065G040210412K	A	CAP CHIP 0402 100NF K 16V X7R	
C217	065G040210412K	A	CAP CHIP 0402 100NF K 16V X7R	
C216	065G040210412K	A	CAP CHIP 0402 100NF K 16V X7R	
C215	065G040210412K	A	CAP CHIP 0402 100NF K 16V X7R	
C214	065G040210412K	A	CAP CHIP 0402 100NF K 16V X7R	
C236	065G040210412K	A	CAP CHIP 0402 100NF K 16V X7R	
C712	065G040210412K	A	CAP CHIP 0402 100NF K 16V X7R	

Downloaded from www.Manualslib.com manuals search engine

C711	065G040210412K	A	CAP CHIP 0402 100NF K 16V X7R	
C708	065G040210412K	A	CAP CHIP 0402 100NF K 16V X7R	
C707	065G040210412K	A	CAP CHIP 0402 100NF K 16V X7R	
C467	065G040210412K	Y	CAP CHIP 0402 100N 16V X7R +/-10%	
C512	065G040210412K	Y	CAP CHIP 0402 100N 16V X7R +/-10%	
C516	065G040210412K	Y	CAP CHIP 0402 100N 16V X7R +/-10%	
C519	065G040210412K	Y	CAP CHIP 0402 100N 16V X7R +/-10%	
C521	065G040210412K	Y	CAP CHIP 0402 100N 16V X7R +/-10%	
C522	065G040210412K	Y	CAP CHIP 0402 100N 16V X7R +/-10%	
C524	065G040210412K	Y	CAP CHIP 0402 100N 16V X7R +/-10%	
C526	065G040210412K	Y	CAP CHIP 0402 100N 16V X7R +/-10%	
C543	065G040210412K	Y	CAP CHIP 0402 100N 16V X7R +/-10%	
C545	065G040210412K	Y	CAP CHIP 0402 100N 16V X7R +/-10%	
C548	065G040210412K	Y	CAP CHIP 0402 100N 16V X7R +/-10%	
C574	065G040210412K	Y	CAP CHIP 0402 100N 16V X7R +/-10%	
C466	065G040210412K	Y	CAP CHIP 0402 100N 16V X7R +/-10%	
C334	065G040210412K	Y	CAP CHIP 0402 100N 16V X7R +/-10%	
C335	065G040210412K	Y	CAP CHIP 0402 100N 16V X7R +/-10%	
C336	065G040210412K	Y	CAP CHIP 0402 100N 16V X7R +/-10%	
C341	065G040210412K	Y	CAP CHIP 0402 100N 16V X7R +/-10%	
C342	065G040210412K	Y	CAP CHIP 0402 100N 16V X7R +/-10%	
C343	065G040210412K	Y	CAP CHIP 0402 100N 16V X7R +/-10%	
C344	065G040210412K	Y	CAP CHIP 0402 100N 16V X7R +/-10%	
C345	065G040210412K	Y	CAP CHIP 0402 100N 16V X7R +/-10%	
C346	065G040210412K	Y	CAP CHIP 0402 100N 16V X7R +/-10%	
C347	065G040210412K	Y	CAP CHIP 0402 100N 16V X7R +/-10%	
C428	065G040210412K	Y	CAP CHIP 0402 100N 16V X7R +/-10%	
C461	065G040210412K	Y	CAP CHIP 0402 100N 16V X7R +/-10%	
C575	065G040210412K	Y	CAP CHIP 0402 100N 16V X7R +/-10%	
C7946	065G040210412K	Y	CAP CHIP 0402 100N 16V X7R +/-10%	
C7915	065G040210412K	Y	CAP CHIP 0402 100N 16V X7R +/-10%	
C7905	065G040210412K	Y	CAP CHIP 0402 100N 16V X7R +/-10%	
C7948	065G040210412K	Y	CAP CHIP 0402 100N 16V X7R +/-10%	
C7949	065G040210412K	Y	CAP CHIP 0402 100N 16V X7R +/-10%	
C7950	065G040210412K	Y	CAP CHIP 0402 100N 16V X7R +/-10%	
C7951	065G040210412K	Y	CAP CHIP 0402 100N 16V X7R +/-10%	
C7952	065G040210412K	Y	CAP CHIP 0402 100N 16V X7R +/-10%	
C7953	065G040210412K	Y	CAP CHIP 0402 100N 16V X7R +/-10%	
C7954	065G040210412K	Y	CAP CHIP 0402 100N 16V X7R +/-10%	
C7955	065G040210412K	Y	CAP CHIP 0402 100N 16V X7R +/-10%	
C7958	065G040210412K	Y	CAP CHIP 0402 100N 16V X7R +/-10%	
C7945	065G040210412K	Y	CAP CHIP 0402 100N 16V X7R +/-10%	
C576	065G040210412K	Y	CAP CHIP 0402 100N 16V X7R +/-10%	
C618	065G040210412K	Y	CAP CHIP 0402 100N 16V X7R +/-10%	
C620	065G040210412K	Y	CAP CHIP 0402 100N 16V X7R +/-10%	
C622	065G040210412K	Y	CAP CHIP 0402 100N 16V X7R +/-10%	
C624	065G040210412K	Y	CAP CHIP 0402 100N 16V X7R +/-10%	
C629	065G040210412K	Y	CAP CHIP 0402 100N 16V X7R +/-10%	
C767	065G040210412K	Y	CAP CHIP 0402 100N 16V X7R +/-10%	
C768	065G040210412K	Y	CAP CHIP 0402 100N 16V X7R +/-10%	
C769	065G040210412K	Y	CAP CHIP 0402 100N 16V X7R +/-10%	
C770	065G040210412K	Y	CAP CHIP 0402 100N 16V X7R +/-10%	
C7906	065G040210412K	Y	CAP CHIP 0402 100N 16V X7R +/-10%	
C7907	065G040210412K	Y	CAP CHIP 0402 100N 16V X7R +/-10%	

Downloaded from www.Manualslib.com manuals search engine

C333	065G040210412K	Y	CAP CHIP 0402 100N 16V X7R +/-10%	
C169	065G040210412K	Y	CAP CHIP 0402 100N 16V X7R +/-10%	
C173	065G040210412K	Y	CAP CHIP 0402 100N 16V X7R +/-10%	
C210	065G040210412K	Y	CAP CHIP 0402 100N 16V X7R +/-10%	
C244	065G040210412K	Y	CAP CHIP 0402 100N 16V X7R +/-10%	
C265	065G040210412K	Y	CAP CHIP 0402 100N 16V X7R +/-10%	
C302	065G040210412K	Y	CAP CHIP 0402 100N 16V X7R +/-10%	
C304	065G040210412K	Y	CAP CHIP 0402 100N 16V X7R +/-10%	
C307	065G040210412K	Y	CAP CHIP 0402 100N 16V X7R +/-10%	
C308	065G040210412K	Y	CAP CHIP 0402 100N 16V X7R +/-10%	
C332	065G040210412K	Y	CAP CHIP 0402 100N 16V X7R +/-10%	
C331	065G040210412K	Y	CAP CHIP 0402 100N 16V X7R +/-10%	
C328	065G040210412K	Y	CAP CHIP 0402 100N 16V X7R +/-10%	
C327	065G040210412K	Y	CAP CHIP 0402 100N 16V X7R +/-10%	
C326	065G040210412K	Y	CAP CHIP 0402 100N 16V X7R +/-10%	
C322	065G040210412K	Y	CAP CHIP 0402 100N 16V X7R +/-10%	
C321	065G040210412K	Y	CAP CHIP 0402 100N 16V X7R +/-10%	
C320	065G040210412K	Y	CAP CHIP 0402 100N 16V X7R +/-10%	
C310	065G040210412K	Y	CAP CHIP 0402 100N 16V X7R +/-10%	
C423	065G0402105A5K	T	CAP CHIP 0402 1UF K 10V X5R	
C413	065G040215031J	Y	CAP CHIP 0402 15PF J 50V NPO	
C416	065G040215031J	Y	CAP CHIP 0402 15PF J 50V NPO	
C417	065G040215031J	Y	CAP CHIP 0402 15PF J 50V NPO	
C439	065G040215031J	Y	CAP CHIP 0402 15PF J 50V NPO	
C440	065G040215031J	Y	CAP CHIP 0402 15PF J 50V NPO	
C444	065G040215031J	Y	CAP CHIP 0402 15PF J 50V NPO	
C261	065G0402224A5K	T	CAP CHIP 0402 0.22UF 10V X5R	
C717	065G040227031J	Y	CAP CHIP 0402 27P 50V NPO +/-5%	
C718	065G040227031J	Y	CAP CHIP 0402 27P 50V NPO +/-5%	
C291	065G040233132K	Y	CAP CHIP 0402 330P 50V X7R +/-10%	
C627	065G040233132K	Y	CAP CHIP 0402 330P 50V X7R +/-10%	
C646	065G040233132K	Y	CAP CHIP 0402 330P 50V X7R +/-10%	
C245	065G040233232K	Y	CAP CHIP 0402 3N3 50V X7R +/-10%	
C7923	065G040247031J	A	CAP CHIP 0402 47PF J 50V NPO	
C7902	065G040247031J	Y	CAP CHIP 0402 47PF 50V NPO +/-5%	
C447	065G040247031J	Y	CAP CHIP 0402 47PF 50V NPO +/-5%	
C401	065G040247232K	Y	CAP CHIP 0402 4700P 50V X7R +/-10%	
C411	065G040247232K	Y	CAP CHIP 0402 4700P 50V X7R +/-10%	
C418	065G040247312K	T	CAP CHIP 0402 0.047UF 16V X7R	
C446	065G040247312K	T	CAP CHIP 0402 0.047UF 16V X7R	
C777	065G040247312K	T	CAP CHIP 0402 0.047UF 16V X7R	
C778	065G040247312K	T	CAP CHIP 0402 0.047UF 16V X7R	
C7918	065G040247312K	T	CAP CHIP 0402 0.047UF 16V X7R	
C7922	065G040247312K	T	CAP CHIP 0402 0.047UF 16V X7R	
C7940	065G040247312K	T	CAP CHIP 0402 0.047UF 16V X7R	
C7957	065G040247312K	T	CAP CHIP 0402 0.047UF 16V X7R	
C225	065G060310031J	Y	CAP CHIP 0603 10P 50V NPO +/-5%	
C226	065G060310031J	Y	CAP CHIP 0603 10P 50V NPO +/-5%	
C744	065G060310031J	Y	CAP CHIP 0603 10P 50V NPO +/-5%	
C782	065G060310131J	Y	CAP CHIP 0603 100P 50V NPO +/-5%	
C783	065G060310131J	Y	CAP CHIP 0603 100P 50V NPO +/-5%	
C227	065G060310232K	Y	CAP CHIP 0603 1N 50V X7R +/-10%	
ZD515	065G060310312K	A	CAP CHIP 0603 10NF K 16V X7R	
ZD514	065G060310312K	A	CAP CHIP 0603 10NF K 16V X7R	

Downloaded from www.Manualslib.com manuals search engine

ZD421	065G060310312K	A	CAP CHIP 0603 10NF K 16V X7R	
ZD420	065G060310312K	A	CAP CHIP 0603 10NF K 16V X7R	
ZD415	065G060310312K	A	CAP CHIP 0603 10NF K 16V X7R	
ZD414	065G060310312K	A	CAP CHIP 0603 10NF K 16V X7R	
ZD413	065G060310312K	A	CAP CHIP 0603 10NF K 16V X7R	
ZD412	065G060310312K	A	CAP CHIP 0603 10NF K 16V X7R	
ZD411	065G060310312K	A	CAP CHIP 0603 10NF K 16V X7R	
ZD410	065G060310312K	A	CAP CHIP 0603 10NF K 16V X7R	
C275	065G060310332K	Y	CAP CHIP 0603 10N 50V X7R +/-10%	
C609	065G060310332K	Y	CAP CHIP 0603 10N 50V X7R +/-10%	
C610	065G060310332K	Y	CAP CHIP 0603 10N 50V X7R +/-10%	
C7908	065G060310332K	Y	CAP CHIP 0603 10N 50V X7R +/-10%	
C729	065G060310412K	Y	CAP CHIP 0603 100N 16V X7R +/-10%	
C728	065G060310412K	Y	CAP CHIP 0603 100N 16V X7R +/-10%	
C727	065G060310412K	Y	CAP CHIP 0603 100N 16V X7R +/-10%	
C726	065G060310412K	Y	CAP CHIP 0603 100N 16V X7R +/-10%	
C550	065G060310412K	Y	CAP CHIP 0603 100N 16V X7R +/-10%	
C539	065G060310412K	Y	CAP CHIP 0603 100N 16V X7R +/-10%	
C394	065G060310412K	Y	CAP CHIP 0603 100N 16V X7R +/-10%	
C392	065G060310412K	Y	CAP CHIP 0603 100N 16V X7R +/-10%	
C390	065G060310412K	Y	CAP CHIP 0603 100N 16V X7R +/-10%	
C211	065G060310412K	Y	CAP CHIP 0603 100N 16V X7R +/-10%	
C151	065G060310412K	Y	CAP CHIP 0603 100N 16V X7R +/-10%	
C133	065G060310412K	Y	CAP CHIP 0603 100N 16V X7R +/-10%	
C130	065G060310412K	Y	CAP CHIP 0603 100N 16V X7R +/-10%	
C123	065G060310412K	Y	CAP CHIP 0603 100N 16V X7R +/-10%	
C102	065G060310412K	Y	CAP CHIP 0603 100N 16V X7R +/-10%	
C730	065G060310412K	Y	CAP CHIP 0603 100N 16V X7R +/-10%	
C7916	065G060310412K	Y	CAP CHIP 0603 100N 16V X7R +/-10%	
C7938	065G060310412K	Y	CAP CHIP 0603 100N 16V X7R +/-10%	
C761	065G060310412K	Y	CAP CHIP 0603 100N 16V X7R +/-10%	
C751	065G060310412K	Y	CAP CHIP 0603 100N 16V X7R +/-10%	
C738	065G060310412K	Y	CAP CHIP 0603 100N 16V X7R +/-10%	
C737	065G060310412K	Y	CAP CHIP 0603 100N 16V X7R +/-10%	
C734	065G060310412K	Y	CAP CHIP 0603 100N 16V X7R +/-10%	
C731	065G060310412K	Y	CAP CHIP 0603 100N 16V X7R +/-10%	
C278	065G060310422K	Y	CAP CHIP 0603 100N 25V X7R +/-10%	
C468	065G060310422K	Y	CAP CHIP 0603 100N 25V X7R +/-10%	
C136	065G060310432K	F	CAP CHIP 0603 0.1UF K 50V X7R	
C138	065G060310432K	F	CAP CHIP 0603 0.1UF K 50V X7R	
C142	065G060310432K	F	CAP CHIP 0603 0.1UF K 50V X7R	
C144	065G060310432K	F	CAP CHIP 0603 0.1UF K 50V X7R	
C148	065G060310432K	F	CAP CHIP 0603 0.1UF K 50V X7R	
C267	065G060310437Z	Y	CAP CHIP 0603 100N 50V Y5V -20%+80%	
C269	065G060310437Z	Y	CAP CHIP 0603 100N 50V Y5V -20%+80%	
C281	065G060310437Z	Y	CAP CHIP 0603 100N 50V Y5V -20%+80%	
C596	065G060310437Z	Y	CAP CHIP 0603 100N 50V Y5V -20%+80%	
C597	065G060310437Z	Y	CAP CHIP 0603 100N 50V Y5V -20%+80%	
C602	065G060310437Z	Y	CAP CHIP 0603 100N 50V Y5V -20%+80%	
C603	065G060310437Z	Y	CAP CHIP 0603 100N 50V Y5V -20%+80%	
C604	065G060310437Z	Y	CAP CHIP 0603 100N 50V Y5V -20%+80%	
C607	065G060310437Z	Y	CAP CHIP 0603 100N 50V Y5V -20%+80%	
C628	065G060310437Z	Y	CAP CHIP 0603 100N 50V Y5V -20%+80%	
C636	065G060310437Z	Y	CAP CHIP 0603 100N 50V Y5V -20%+80%	

Downloaded from www.Manualslib.com manuals search engine

C637	065G060310437Z	Y	CAP CHIP 0603 100N 50V Y5V -20%+80%	
C641	065G060310437Z	Y	CAP CHIP 0603 100N 50V Y5V -20%+80%	
C644	065G060310437Z	Y	CAP CHIP 0603 100N 50V Y5V -20%+80%	
C715	065G060310437Z	Y	CAP CHIP 0603 100N 50V Y5V -20%+80%	
C716	065G060310437Z	Y	CAP CHIP 0603 100N 50V Y5V -20%+80%	
C7909	065G060310437Z	Y	CAP CHIP 0603 100N 50V Y5V -20%+80%	
C623	065G060310512K	3	MLCC 0603 CAP 1UF K 16V X7R	
C621	065G060310512K	3	MLCC 0603 CAP 1UF K 16V X7R	
C579	065G060310512K	3	MLCC 0603 CAP 1UF K 16V X7R	
C577	065G060310512K	3	MLCC 0603 CAP 1UF K 16V X7R	
C573	065G060310512K	3	MLCC 0603 CAP 1UF K 16V X7R	
C572	065G060310512K	3	MLCC 0603 CAP 1UF K 16V X7R	
C570	065G060310512K	3	MLCC 0603 CAP 1UF K 16V X7R	
C553	065G060310512K	3	MLCC 0603 CAP 1UF K 16V X7R	
C546	065G060310512K	3	MLCC 0603 CAP 1UF K 16V X7R	
C541	065G060310512K	3	MLCC 0603 CAP 1UF K 16V X7R	
C510	065G060310512K	3	MLCC 0603 CAP 1UF K 16V X7R	
C389	065G060310512K	3	MLCC 0603 CAP 1UF K 16V X7R	
C625	065G060310512K	3	MLCC 0603 CAP 1UF K 16V X7R	
C733	065G060310512K	3	MLCC 0603 CAP 1UF K 16V X7R	
C7910	065G060310512K	T	CAP CHIP 0603 1UF K 16V X7R	
C318	065G060310512K	T	CAP CHIP 0603 1UF K 16V X7R	
C306	065G060310512K	T	CAP CHIP 0603 1UF K 16V X7R	
C303	065G060310512K	T	CAP CHIP 0603 1UF K 16V X7R	
C297	065G060310512K	T	CAP CHIP 0603 1UF K 16V X7R	
C247	065G060310512K	T	CAP CHIP 0603 1UF K 16V X7R	
C246	065G060310512K	T	CAP CHIP 0603 1UF K 16V X7R	
C139	065G060310512K	T	CAP CHIP 0603 1UF K 16V X7R	
C330	065G060310512K	T	CAP CHIP 0603 1UF K 16V X7R	
C427	065G060310512K	T	CAP CHIP 0603 1UF K 16V X7R	
C626	065G060310512K	T	CAP CHIP 0603 1UF K 16V X7R	
C631	065G060310512K	T	CAP CHIP 0603 1UF K 16V X7R	
C645	065G060310512K	T	CAP CHIP 0603 1UF K 16V X7R	
C685	065G060310512K	T	CAP CHIP 0603 1UF K 16V X7R	
C504	065G0603105A7Z	3	CAP CHIP 0603 1U 10V Y5V -20%+80%	
C507	065G0603105A7Z	3	CAP CHIP 0603 1U 10V Y5V -20%+80%	
C701	065G0603105A7Z	3	CAP CHIP 0603 1U 10V Y5V -20%+80%	
C293	065G0603105A7Z	3	CAP CHIP 0603 1U 10V Y5V -20%+80%	
C276	065G0603105A7Z	3	CAP CHIP 0603 1U 10V Y5V -20%+80%	
C240	065G0603105A7Z	3	CAP CHIP 0603 1U 10V Y5V -20%+80%	
C238	065G0603105A7Z	3	CAP CHIP 0603 1U 10V Y5V -20%+80%	
C218	065G0603105A7Z	3	CAP CHIP 0603 1U 10V Y5V -20%+80%	
C212	065G0603105A7Z	3	CAP CHIP 0603 1U 10V Y5V -20%+80%	
C127	065G0603105A7Z	3	CAP CHIP 0603 1U 10V Y5V -20%+80%	
C600	065G060315332K	Y	CAP CHIP 0603 15NF K 50V X7R	
C601	065G060315332K	Y	CAP CHIP 0603 15NF K 50V X7R	
C555	065G060322232K	Y	CAP CHIP 0603 2N2 50V X7R +/-10%	
C556	065G060322232K	Y	CAP CHIP 0603 2N2 50V X7R +/-10%	
C557	065G060322232K	Y	CAP CHIP 0603 2N2 50V X7R +/-10%	
C562	065G060322232K	Y	CAP CHIP 0603 2N2 50V X7R +/-10%	
C564	065G060322232K	Y	CAP CHIP 0603 2N2 50V X7R +/-10%	
C566	065G060322232K	Y	CAP CHIP 0603 2N2 50V X7R +/-10%	
C7846	065G060333031J	Y	CAP CHIP 0603 33P 50V NPO +/-5%	
C7944	065G060333931C	Y	CAP CHIP 0603 3P3 50V NPO +/-0.25PF	

Downloaded from www.Manualslib.com manuals search engine

C771	065G060339031J	Y	CAP CHIP 0603 39PF J 50V NPO	
C772	065G060339031J	Y	CAP CHIP 0603 39PF J 50V NPO	
C7941	065G060347031J	Y	CAP CHIP 0603 47P 50V NPO +/-5%	
C7919	065G060347031J	Y	CAP CHIP 0603 47P 50V NPO +/-5%	
C7913	065G060347031J	Y	CAP CHIP 0603 47P 50V NPO +/-5%	
C460	065G060347031J	Y	CAP CHIP 0603 47P 50V NPO +/-5%	
C598	065G060347131J	Y	CAP CHIP 0603 470P 50V NPO +/-5%	
C599	065G060347131J	Y	CAP CHIP 0603 470P 50V NPO +/-5%	
C508	065G060347312K	Y	CAP CHIP 0603 47N 16V X7R +/-10%	
C7838	065G060347412K	3	CAP CHIP 0603 0.47UF K 16V X7R	
C232	065G060347505K	T	CAP MLCC 0603 4.7UF K 6.3V X5R	
C239	065G060347505K	T	CAP MLCC 0603 4.7UF K 6.3V X5R	
C223	065G060347505K	T	CAP MLCC 0603 4.7UF K 6.3V X5R	
C204	065G060347505K	T	CAP MLCC 0603 4.7UF K 6.3V X5R	
C213	065G060347505K	T	CAP MLCC 0603 4.7UF K 6.3V X5R	
C220	065G060347505K	T	CAP MLCC 0603 4.7UF K 6.3V X5R	
C406	065G060350931D	Y	CAP CHIP 0603 5PF 50V NPO +/-0.5PF	
C407	065G060350931D	Y	CAP CHIP 0603 5PF 50V NPO +/-0.5PF	
C408	065G060350931D	Y	CAP CHIP 0603 5PF 50V NPO +/-0.5PF	
C409	065G060350931D	Y	CAP CHIP 0603 5PF 50V NPO +/-0.5PF	
C410	065G060350931D	Y	CAP CHIP 0603 5PF 50V NPO +/-0.5PF	
C567	065G080510617Z	3	CAP CHIP 0805 10U 16V Y5V -20~+80%	
C571	065G080510617Z	3	CAP CHIP 0805 10U 16V Y5V -20~+80%	
C176	065G0805106A7Z	3	CAP CHIP 0805 10U 10V Y5V -20~+80%	
C168	065G0805106A7Z	3	CAP CHIP 0805 10U 10V Y5V -20~+80%	
C222	065G0805106A7Z	3	CAP CHIP 0805 10U 10V Y5V -20~+80%	
C231	065G0805106A7Z	3	CAP CHIP 0805 10U 10V Y5V -20~+80%	
C505	065G0805106A7Z	3	CAP CHIP 0805 10U 10V Y5V -20~+80%	
C517	065G0805106A7Z	3	CAP CHIP 0805 10U 10V Y5V -20~+80%	
C518	065G0805106A7Z	3	CAP CHIP 0805 10U 10V Y5V -20~+80%	
C520	065G0805106A7Z	3	CAP CHIP 0805 10U 10V Y5V -20~+80%	
C523	065G0805106A7Z	3	CAP CHIP 0805 10U 10V Y5V -20~+80%	
C527	065G0805106A7Z	3	CAP CHIP 0805 10U 10V Y5V -20~+80%	
C528	065G0805106A7Z	3	CAP CHIP 0805 10U 10V Y5V -20~+80%	
C552	065G0805106A7Z	3	CAP CHIP 0805 10U 10V Y5V -20~+80%	
C558	065G0805106A7Z	3	CAP CHIP 0805 10U 10V Y5V -20~+80%	
C559	065G0805106A7Z	3	CAP CHIP 0805 10U 10V Y5V -20~+80%	
C560	065G0805106A7Z	3	CAP CHIP 0805 10U 10V Y5V -20~+80%	
C561	065G0805106A7Z	3	CAP CHIP 0805 10U 10V Y5V -20~+80%	
C563	065G0805106A7Z	3	CAP CHIP 0805 10U 10V Y5V -20~+80%	
C565	065G0805106A7Z	3	CAP CHIP 0805 10U 10V Y5V -20~+80%	
C578	065G0805106A7Z	3	CAP CHIP 0805 10U 10V Y5V -20~+80%	
C503	065G0805106A7Z	3	CAP CHIP 0805 10U 10V Y5V -20~+80%	
C237	065G0805106A7Z	3	CAP CHIP 0805 10U 10V Y5V -20~+80%	
C264	065G0805106A7Z	3	CAP CHIP 0805 10U 10V Y5V -20~+80%	
C282	065G0805106A7Z	3	CAP CHIP 0805 10U 10V Y5V -20~+80%	
C286	065G0805106A7Z	3	CAP CHIP 0805 10U 10V Y5V -20~+80%	
C429	065G0805106A7Z	3	CAP CHIP 0805 10U 10V Y5V -20~+80%	
C458	065G0805106A7Z	3	CAP CHIP 0805 10U 10V Y5V -20~+80%	
C465	065G0805106A7Z	3	CAP CHIP 0805 10U 10V Y5V -20~+80%	
C469	065G0805106A7Z	3	CAP CHIP 0805 10U 10V Y5V -20~+80%	
C470	065G0805106A7Z	3	CAP CHIP 0805 10U 10V Y5V -20~+80%	
C471	065G0805106A7Z	3	CAP CHIP 0805 10U 10V Y5V -20~+80%	
C472	065G0805106A7Z	3	CAP CHIP 0805 10U 10V Y5V -20~+80%	

Downloaded from www.Manualslib.com manuals search engine

C473	065G0805106A7Z	3	CAP CHIP 0805 10U 10V Y5V -20~+80%	
C474	065G0805106A7Z	3	CAP CHIP 0805 10U 10V Y5V -20~+80%	
C475	065G0805106A7Z	3	CAP CHIP 0805 10U 10V Y5V -20~+80%	
C476	065G0805106A7Z	3	CAP CHIP 0805 10U 10V Y5V -20~+80%	
C723	065G0805106A7Z	3	CAP CHIP 0805 10U 10V Y5V -20~+80%	
C724	065G0805106A7Z	3	CAP CHIP 0805 10U 10V Y5V -20~+80%	
C725	065G0805106A7Z	3	CAP CHIP 0805 10U 10V Y5V -20~+80%	
C732	065G0805106A7Z	3	CAP CHIP 0805 10U 10V Y5V -20~+80%	
C735	065G0805106A7Z	3	CAP CHIP 0805 10U 10V Y5V -20~+80%	
C736	065G0805106A7Z	3	CAP CHIP 0805 10U 10V Y5V -20~+80%	
C739	065G0805106A7Z	3	CAP CHIP 0805 10U 10V Y5V -20~+80%	
C748	065G0805106A7Z	3	CAP CHIP 0805 10U 10V Y5V -20~+80%	
C749	065G0805106A7Z	3	CAP CHIP 0805 10U 10V Y5V -20~+80%	
C750	065G0805106A7Z	3	CAP CHIP 0805 10U 10V Y5V -20~+80%	
C753	065G0805106A7Z	3	CAP CHIP 0805 10U 10V Y5V -20~+80%	
C760	065G0805106A7Z	3	CAP CHIP 0805 10U 10V Y5V -20~+80%	
C765	065G0805106A7Z	3	CAP CHIP 0805 10U 10V Y5V -20~+80%	
C766	065G0805106A7Z	3	CAP CHIP 0805 10U 10V Y5V -20~+80%	
C722	065G0805106A7Z	3	CAP CHIP 0805 10U 10V Y5V -20~+80%	
C156	065G0805106A7Z	3	CAP CHIP 0805 10U 10V Y5V -20~+80%	
C101	065G0805106A7Z	3	CAP CHIP 0805 10U 10V Y5V -20~+80%	
C612	065G0805106A7Z	3	CAP CHIP 0805 10U 10V Y5V -20~+80%	
C613	065G0805106A7Z	3	CAP CHIP 0805 10U 10V Y5V -20~+80%	
C614	065G0805106A7Z	3	CAP CHIP 0805 10U 10V Y5V -20~+80%	
C615	065G0805106A7Z	3	CAP CHIP 0805 10U 10V Y5V -20~+80%	
C616	065G0805106A7Z	3	CAP CHIP 0805 10U 10V Y5V -20~+80%	
C710	065G0805106A7Z	3	CAP CHIP 0805 10U 10V Y5V -20~+80%	
C706	065G0805106A7Z	3	CAP CHIP 0805 10U 10V Y5V -20~+80%	
C689	065G0805106A7Z	3	CAP CHIP 0805 10U 10V Y5V -20~+80%	
C688	065G0805106A7Z	3	CAP CHIP 0805 10U 10V Y5V -20~+80%	
C654	065G0805106A7Z	3	CAP CHIP 0805 10U 10V Y5V -20~+80%	
C633	065G0805106A7Z	3	CAP CHIP 0805 10U 10V Y5V -20~+80%	
C617	065G0805106A7Z	3	CAP CHIP 0805 10U 10V Y5V -20~+80%	
C7926	065G0805106A7Z	Y	CAP CHIP 0805 10UF Z 10V Y5V	
C7927	065G0805106A7Z	Y	CAP CHIP 0805 10UF Z 10V Y5V	
C7928	065G0805106A7Z	Y	CAP CHIP 0805 10UF Z 10V Y5V	
C7932	065G0805106A7Z	Y	CAP CHIP 0805 10UF Z 10V Y5V	
C7911	065G0805106A7Z	Y	CAP CHIP 0805 10UF Z 10V Y5V	
C581	065G080547412K	Y	CAP CHIP 0805 470N 16V X7R +/-10%	
C7839	065G0805475A2K	3	CAP CHIP 4.7UF 10V X7R +/- 10%	
C7804	065G0805475A2K	3	CAP CHIP 4.7UF 10V X7R +/- 10%	
C740	065G0805475A2K	3	CAP CHIP 4.7UF 10V X7R +/- 10%	
C709	065G0805475A2K	3	CAP CHIP 4.7UF 10V X7R +/- 10%	
C705	065G0805475A2K	3	CAP CHIP 4.7UF 10V X7R +/- 10%	
C702	065G0805475A2K	3	CAP CHIP 4.7UF 10V X7R +/- 10%	
C608	065G0805475A2K	3	CAP CHIP 4.7UF 10V X7R +/- 10%	
C547	065G0805475A2K	3	CAP CHIP 4.7UF 10V X7R +/- 10%	
C542	065G0805475A2K	3	CAP CHIP 4.7UF 10V X7R +/- 10%	
C515	065G0805475A2K	3	CAP CHIP 4.7UF 10V X7R +/- 10%	
C511	065G0805475A2K	3	CAP CHIP 4.7UF 10V X7R +/- 10%	
C463	065G0805475A2K	3	CAP CHIP 4.7UF 10V X7R +/- 10%	
C121	065G0805475A2K	3	CAP CHIP 4.7UF 10V X7R +/- 10%	
C241	065G0805475A2K	3	CAP CHIP 4.7UF 10V X7R +/- 10%	
C242	065G0805475A2K	3	CAP CHIP 4.7UF 10V X7R +/- 10%	

Downloaded from www.Manualslib.com manuals search engine

C251	065G0805475A2K 3	CAP CHIP 4.7UF 10V X7R +/- 10%	
C252	065G0805475A2K 3	CAP CHIP 4.7UF 10V X7R +/- 10%	
C254	065G0805475A2K 3	CAP CHIP 4.7UF 10V X7R +/- 10%	
C301	065G0805475A2K 3	CAP CHIP 4.7UF 10V X7R +/- 10%	
C305	065G0805475A2K 3	CAP CHIP 4.7UF 10V X7R +/- 10%	
C319	065G0805475A2K 3	CAP CHIP 4.7UF 10V X7R +/- 10%	
C329	065G0805475A2K 3	CAP CHIP 4.7UF 10V X7R +/- 10%	
C462	065G0805475A2K 3	CAP CHIP 4.7UF 10V X7R +/- 10%	
C525	065G120610612K 3	CHIP 10UF 16V X7R 10%	
C506	065G120610612K 3	CHIP 10UF 16V X7R 10%	
C7837	065G120610612K 3	CHIP 10UF 16V X7R 10%	
C759	065G1206226A5K T	CAP CHIP1206 22UF K 10V X5R	
C591	065G120647432K Y	CER 1206 470N 50V X7R +/-10%	
C7847	065G120647522K T	CAP CHIP 1206 4.7UF K 25V X7R	
C635	065G120668437M Y	CER 1206 680N 50V Y5V +/-20%	
C640	065G120668437M Y	CER 1206 680N 50V Y5V +/-20%	
C7904	065G121010622K T	CHIP 10UF 25V X7R 10%	
C229	065T040210505K Y	CAP CHIP 0402 1UF 6V3 X5R +/-10%	
C580	067G 3111003CT	EC SMD 10UF 16V HV 4X5.5MM	
C540	067G 3111013CT	EC 100UF 16V HV 6.3X5.5MM	
C266	067T 3114713CT	EC SMD 470UF 16V HV 8X10MM	
U201	070GHDCP500HDC	HDCP CODE	
FB616	071G 56121 M	CHIP BEAD 0805 120OHM +-25% 3A	
FB615	071G 56121 M	CHIP BEAD 0805 120OHM +-25% 3A	
FB614	071G 56121 M	CHIP BEAD 0805 120OHM +-25% 3A	
FB613	071G 56121 M	CHIP BEAD 0805 120OHM +-25% 3A	
FB773	071G 56A221 TA	IND FXD 0805 EMI 100MHZ 220R R	
FB780	071G 56A221 TA	IND FXD 0805 EMI 100MHZ 220R R	
FB779	071G 56A221 TA	IND FXD 0805 EMI 100MHZ 220R R	
FB778	071G 56A221 TA	IND FXD 0805 EMI 100MHZ 220R R	
FB708	071G 56A221 TA	IND FXD 0805 EMI 100MHZ 220R R	
FB707	071G 56A221 TA	IND FXD 0805 EMI 100MHZ 220R R	
FB706	071G 56A221 TA	IND FXD 0805 EMI 100MHZ 220R R	
FB509	071G 56A221 TA	IND FXD 0805 EMI 100MHZ 220R R	
FB506	071G 56A221 TA	IND FXD 0805 EMI 100MHZ 220R R	
FB751	071G 56G301 MA	CHIP BEAD 0805 300OHM 4A	
FB785	071G 56G301 MA	CHIP BEAD 0805 300OHM 4A	
FB100	071G 56K121 TA	CHIP BEAD 120R/6000MA HCB2012KF-121T60	
FB101	071G 56K121 TA	CHIP BEAD 120R/6000MA HCB2012KF-121T60	
FB207	071G 59A121 TA	CHIP BEAD 120R/3000MA HCB1608KF-121T30	
L759	071G 59B121 K	CHIP BEAD 120 OHM 0603	
R343	071G 59C600 M	CHIP BEAD 60 OHM 0603 600MA	
FB790	071G 59C600 M	CHIP BEAD 60 OHM 0603 600MA	
FB775	071G 59C600 M	CHIP BEAD 60 OHM 0603 600MA	
FB774	071G 59C600 M	CHIP BEAD 60 OHM 0603 600MA	
FB786	071G 59C601 TA	CHIP BEAD 600R/200MA FCM1608K-601T02	
L101	071G 59C800	1HIP BEAD	
L103	071G 59C800	1HIP BEAD	
L104	071G 59C800	1HIP BEAD	
L105	071G 59C800	1HIP BEAD	
L106	071G 59C800	1HIP BEAD	
L107	071G 59C800	1HIP BEAD	
L108	071G 59C800	1HIP BEAD	
L109	071G 59C800	1HIP BEAD	

Downloaded from www.Manualslib.com manuals search engine

L110	071G 59C800	1HIP BEAD	
FB784	071G 59G301	CHIP BEAD 300OHM	
FB104	071G 59G301	CHIP BEAD 300OHM	
FB208	071G 59G301	CHIP BEAD 300OHM	
FB209	071G 59G301	CHIP BEAD 300OHM	
FB783	071G 59G301	CHIP BEAD 300OHM	
FB302	071G 59Q121 M	CHIP BEAD 120R/500MA MGLB1608E121T-LF	
FB401	071G 59Q121 M	CHIP BEAD 120R/500MA MGLB1608E121T-LF	
FB789	071G 59Q121 M	CHIP BEAD 120R/500MA MGLB1608E121T-LF	
FB705	071G 59Q121 M	CHIP BEAD 120R/500MA MGLB1608E121T-LF	
FB704	071G 59Q121 M	CHIP BEAD 120R/500MA MGLB1608E121T-LF	
FB703	071G 59Q121 M	CHIP BEAD 120R/500MA MGLB1608E121T-LF	
FB702	071G 59Q121 M	CHIP BEAD 120R/500MA MGLB1608E121T-LF	
FB701	071G 59Q121 M	CHIP BEAD 120R/500MA MGLB1608E121T-LF	
FB612	071G 59Q121 M	CHIP BEAD 120R/500MA MGLB1608E121T-LF	
FB611	071G 59Q121 M	CHIP BEAD 120R/500MA MGLB1608E121T-LF	
FB610	071G 59Q121 M	CHIP BEAD 120R/500MA MGLB1608E121T-LF	
FB609	071G 59Q121 M	CHIP BEAD 120R/500MA MGLB1608E121T-LF	
FB608	071G 59Q121 M	CHIP BEAD 120R/500MA MGLB1608E121T-LF	
FB513	071G 59Q121 M	CHIP BEAD 120R/500MA MGLB1608E121T-LF	
FB512	071G 59Q121 M	CHIP BEAD 120R/500MA MGLB1608E121T-LF	
FB508	071G 59Q121 M	CHIP BEAD 120R/500MA MGLB1608E121T-LF	
FB403	071G 59Q121 M	CHIP BEAD 120R/500MA MGLB1608E121T-LF	
FB404	071G 59Q121 M	CHIP BEAD 120R/500MA MGLB1608E121T-LF	
FB415	071G 59Q121 M	CHIP BEAD 120R/500MA MGLB1608E121T-LF	
FB416	071G 59Q121 M	CHIP BEAD 120R/500MA MGLB1608E121T-LF	
FB501	071G 59Q121 M	CHIP BEAD 120R/500MA MGLB1608E121T-LF	
FB502	071G 59Q121 M	CHIP BEAD 120R/500MA MGLB1608E121T-LF	
FB503	071G 59Q121 M	CHIP BEAD 120R/500MA MGLB1608E121T-LF	
FB504	071G 59Q121 M	CHIP BEAD 120R/500MA MGLB1608E121T-LF	
FB505	071G 59Q121 M	CHIP BEAD 120R/500MA MGLB1608E121T-LF	
FB201	071G 59Q121 M	CHIP BEAD 120R/500MA MGLB1608E121T-LF	
FB202	071G 59Q121 M	CHIP BEAD 120R/500MA MGLB1608E121T-LF	
FB203	071G 59Q121 M	CHIP BEAD 120R/500MA MGLB1608E121T-LF	
FB204	071G 59Q121 M	CHIP BEAD 120R/500MA MGLB1608E121T-LF	
FB205	071G 59Q121 M	CHIP BEAD 120R/500MA MGLB1608E121T-LF	
FB206	071G 59Q121 M	CHIP BEAD 120R/500MA MGLB1608E121T-LF	
FB301	071G 59Q121 M	CHIP BEAD 120R/500MA MGLB1608E121T-LF	
FB503	071G 59Q121 T	CHIP BEAD 120R/500MA MMZ1608S121CT	
FB502	071G 59Q121 T	CHIP BEAD 120R/500MA MMZ1608S121CT	
FB501	071G 59Q121 T	CHIP BEAD 120R/500MA MMZ1608S121CT	
FB416	071G 59Q121 T	CHIP BEAD 120R/500MA MMZ1608S121CT	
FB415	071G 59Q121 T	CHIP BEAD 120R/500MA MMZ1608S121CT	
FB404	071G 59Q121 T	CHIP BEAD 120R/500MA MMZ1608S121CT	
FB403	071G 59Q121 T	CHIP BEAD 120R/500MA MMZ1608S121CT	
FB401	071G 59Q121 T	CHIP BEAD 120R/500MA MMZ1608S121CT	
FB302	071G 59Q121 T	CHIP BEAD 120R/500MA MMZ1608S121CT	
FB301	071G 59Q121 T	CHIP BEAD 120R/500MA MMZ1608S121CT	
FB206	071G 59Q121 T	CHIP BEAD 120R/500MA MMZ1608S121CT	
FB205	071G 59Q121 T	CHIP BEAD 120R/500MA MMZ1608S121CT	
FB204	071G 59Q121 T	CHIP BEAD 120R/500MA MMZ1608S121CT	
FB203	071G 59Q121 T	CHIP BEAD 120R/500MA MMZ1608S121CT	
FB202	071G 59Q121 T	CHIP BEAD 120R/500MA MMZ1608S121CT	
FB201	071G 59Q121 T	CHIP BEAD 120R/500MA MMZ1608S121CT	

Downloaded from www.Manualslib.com manuals search engine

FB504	071G 59Q121 T	CHIP BEAD 120R/500MA MMZ1608S121CT	
FB787	071G 59Q121 T	CHIP BEAD 120R/500MA MMZ1608S121CT	
FB789	071G 59Q121 T	CHIP BEAD 120R/500MA MMZ1608S121CT	
FB705	071G 59Q121 T	CHIP BEAD 120R/500MA MMZ1608S121CT	
FB704	071G 59Q121 T	CHIP BEAD 120R/500MA MMZ1608S121CT	
FB703	071G 59Q121 T	CHIP BEAD 120R/500MA MMZ1608S121CT	
FB702	071G 59Q121 T	CHIP BEAD 120R/500MA MMZ1608S121CT	
FB701	071G 59Q121 T	CHIP BEAD 120R/500MA MMZ1608S121CT	
FB612	071G 59Q121 T	CHIP BEAD 120R/500MA MMZ1608S121CT	
FB611	071G 59Q121 T	CHIP BEAD 120R/500MA MMZ1608S121CT	
FB610	071G 59Q121 T	CHIP BEAD 120R/500MA MMZ1608S121CT	
FB609	071G 59Q121 T	CHIP BEAD 120R/500MA MMZ1608S121CT	
FB608	071G 59Q121 T	CHIP BEAD 120R/500MA MMZ1608S121CT	
FB513	071G 59Q121 T	CHIP BEAD 120R/500MA MMZ1608S121CT	
FB512	071G 59Q121 T	CHIP BEAD 120R/500MA MMZ1608S121CT	
FB508	071G 59Q121 T	CHIP BEAD 120R/500MA MMZ1608S121CT	
FB505	071G 59Q121 T	CHIP BEAD 120R/500MA MMZ1608S121CT	
L756	073G 6318910K	0603 1.8UH +-10%	
L752	073G253S901 T	SMD CHOKE 90R/400MA ACM2012-900-2P	
L753	073G253S901 T	SMD CHOKE 90R/400MA ACM2012-900-2P	
L757	073T 6318910K	CHIP INDUCTOR 1.8UH	
L201	073T 63828 T	CHIP INDUCROR 0U82 10% MLF1608DR82K	
L111	073T M58908 T	SMD INDUCTOR 27UH 20% SLF10155T-	
L102	073T M58908 T	SMD INDUCTOR 27UH 20% SLF10155T-	
CN301	088G 340 19 VT	HDMI HEADER 19P V/T	
CN752	088G 340 19 VT	HDMI HEADER 19P V/T	
CN301	088T 340 19 VD	HDMI HEADER 19P V/A	2nd source
CN752	088T 340 19 VD	HDMI HEADER 19P V/A	2nd source
D305	093G 60505	DIO SIG SM BAT54C(PHSE)R	
D614	093G 60505	DIO SIG SM BAT54C(PHSE)R	
D619	093G 64 42 P	BAV70 SOT23 BY PAN JIT	
D620	093G 64 42 P	BAV70 SOT23 BY PAN JIT	
D621	093G 64 42 P	BAV70 SOT23 BY PAN JIT	
X701	093G 22S921 C	CRYSTAL 27MHZ 20P SMD-5.0X3.2	
ZD507	093G 39S 34 T	UDZSNP5.6B ROHM	
D618	093G 64S3PH	BAS32L	
D617	093G 64S3PH	BAS32L	
D607	093G 64S3PH	BAS32L	
D606	093G 64S3PH	BAS32L	
D604	093G 64S3PH	BAS32L	
D407	093G 64S3PH	BAS32L	
D406	093G 64S3PH	BAS32L	
D601	093G 64S900 T	DIODE BAS316 SOT-323 PHILIPS	
D602	093G 64S900 T	DIODE BAS316 SOT-323 PHILIPS	
D102	093G3004 2	SR34 PAN JIT	
D103	093G3004 2	SR34 PAN JIT	
	715G3693M01001004K	MAIN BOARD PCB	
	P12T 65011	HEAT PAD (27X27X1) FOR U400	
	Q85T0150101	19-32-SHIELD-TOP	
	Q85T0151101	19-32-SHIELD-BOT	
	Q90T0197 1	HEAT SINK FOR U400	
E750	750TVG320EBC12N000	PANEL LC320WXE-SBC1 NJ LGD	2nd source
	A15T0559101CKD	32TV-VESA-BKT-G3	
	A15T0560101CKD	32TV-BASE-SUPPORT-G3	

Downloaded from www.Manualslib.com manuals search engine

	Q01G6070 1	SCREW	
	Q02G7022 1	BOLT	
	Q11T5048 1	PCB SUPPORT	
	Q15T0713101CKD	BKT_MPCB_SUPPOT_R	
	Q36T 600 31 4	NONWOVEN FABRIC	
	Q36T 600 31 7	NONWOVEN FABRIC	
	Q36T 600 37 1 GP	NONWOVEN FABRIC	
	Q36T 600 37 6	CLOTH_GRIDDING	
	Q40G 32067224A	RATING LABEL	
	Q40G0006600 1A	SERVICE LABEL	
	Q40G581C62435A	S/N LABEL	
	Q44GJ055101	EPS	
	Q44GJ055201	EPS	
	Q44GJ055301	EPS	
	Q44GJ055401	EPS	
	Q44GJ055672 3A	32" HAIER TV CARTON	
	Q45T 99609 61	EPE COVER FOR MONITOR	
	Q50G 500523	CABLE TIE	
	Q52G 1211827	EMI PAD	
	Q52G 1285 12	BIG TAPE	
	Q52G6025 13174	INSULATE SHEET	
	Q52T 1150522	TAPE_INSULATING	
	Q85T0152101CKD	19-32-SHIELD-IO	

Downloaded from www.Manualslib.com manuals search engine