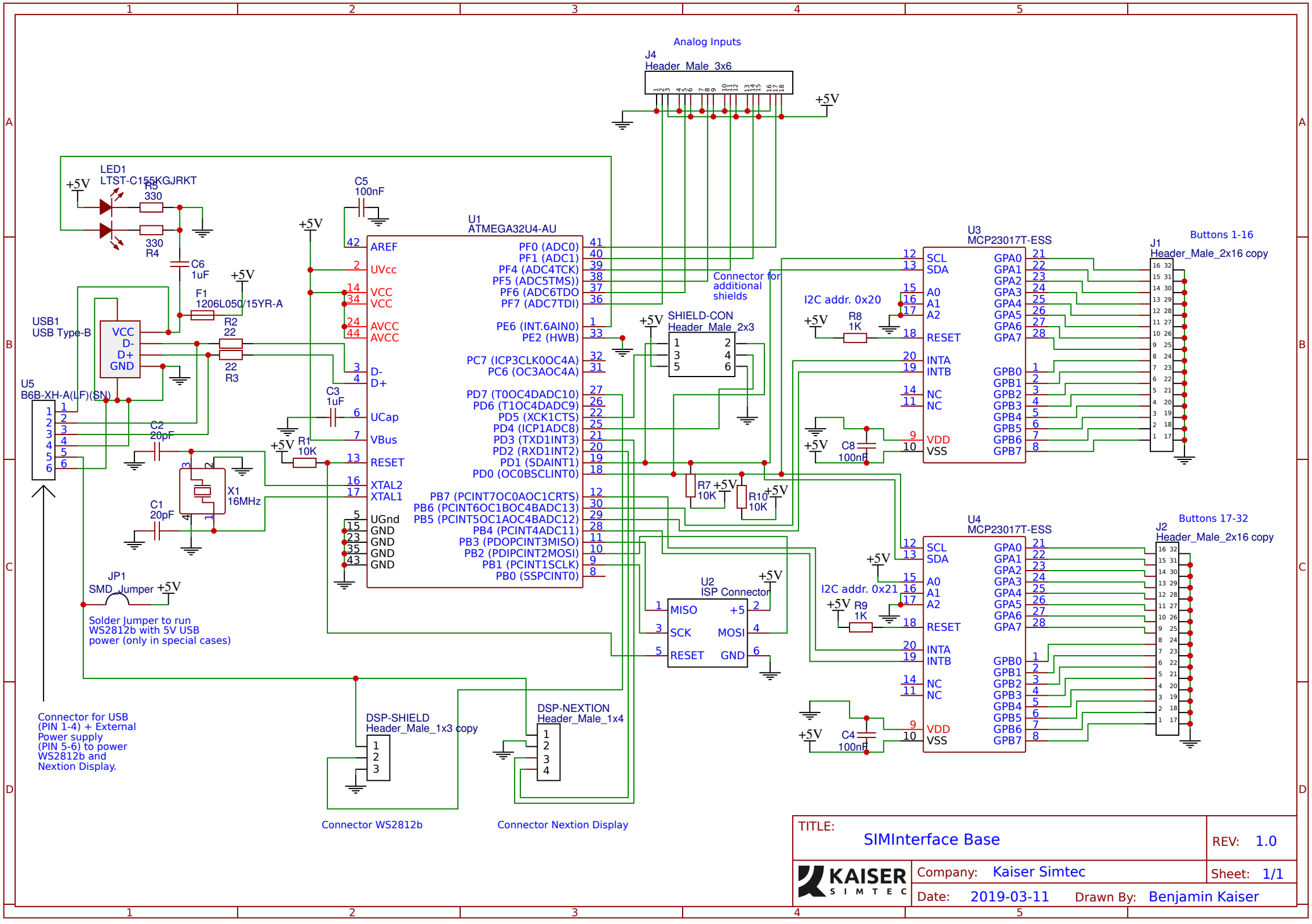

TITLE: SIMInterface Base		REV: 1.0
KAISER SIMTEC	Company: Kaiser Simtec	Sheet: 1/1
	Date: 2019-03-11 Drawn By: Benjamin Kaiser	