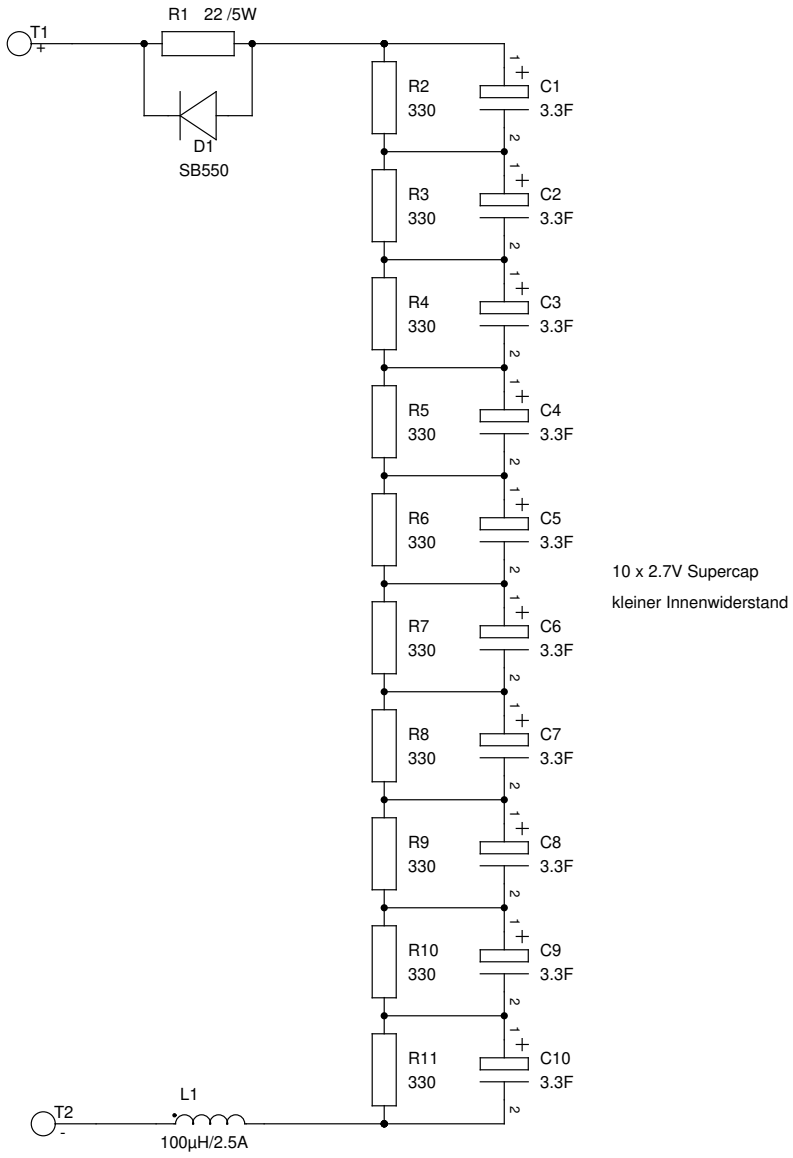

10 x 2.7V Supercap

kleiner Innenwiderstand

TITLE	Supercaps für LGB		
FILE:		REVISION:	2.0
PAGE 1 OF 1		DRAWN BY:	Jürgen Stuber