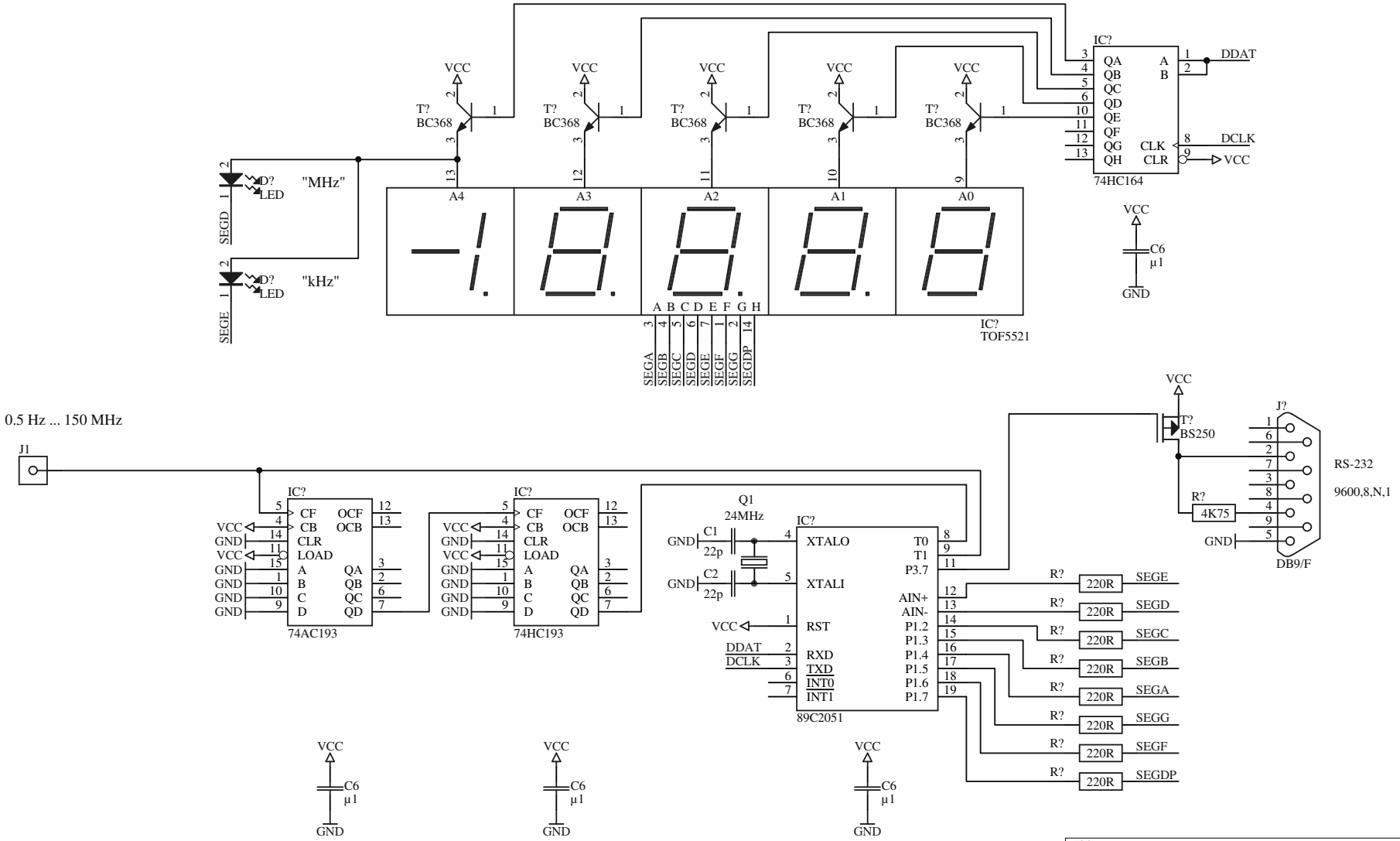

Title		
Frequency Counter		
Size A4	Number	Revision
Date: 29.03.2019		Sheet of
File: D:\Backup\..\Fmeter6.sch		Drawn By: Peter Dannegger