World Trading Net GmbH & Co. KG
Löwentorstraße 40 • 99752 Bleicherode
Telefon: +49 (0)36338 5988900 • info@highlight-led.de

LED 5mm diffus

Absolute Maximum Ratings at Ta=25℃

Parameter	Symbol	Rating	Unit
Forward Current	I_F	25	mA
Power Dissipation	P_d	60	mW
Reverse Voltage	V_R	5	V
Peak Forward Current (Duty 1/10 @1KHZ)	I_{PF}	150	mA
Operation Temperature	T_{OPR}	-40 to +80	℃
Storage Temperature	T_{STG}	-40 to +85	℃

Package Dimensions:

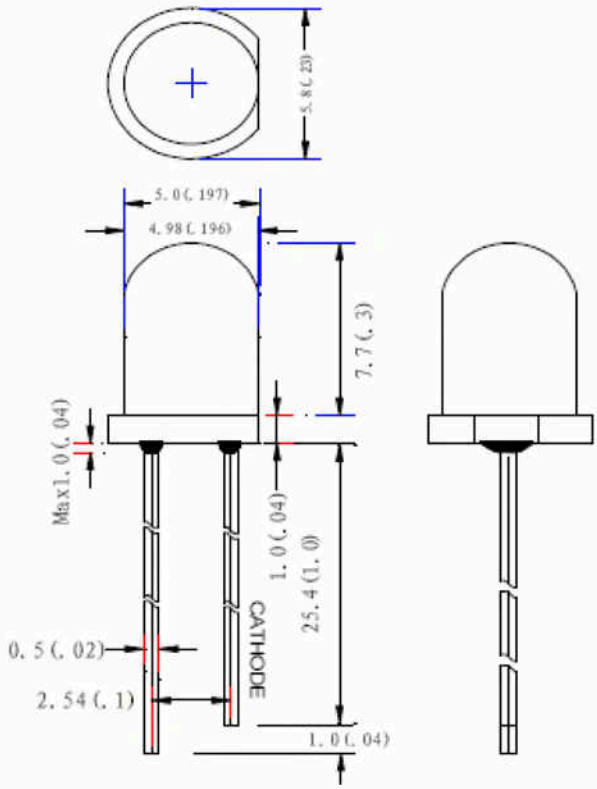

Features:

1.Standard brightness.
2.Choice of various viewing angles
3.IC compatible /Low current capability
4.Long life solid state reliability.

Description:

1.These LED lamps are available with a choice of different colors, light intensities, epoxy color, etc
2.General application for indication,illumination,etc

Products List

Part Number	Dice material And color	Lens color	Peak Wavelength Typ	Vf(V) Typ	Iv(mcd)		Viewing Angle 2 θ 1/2
					Min	Typ	
75500006	InGan/Warm White	White diffused	3300k	3.2	3400	3600	70°

Number	Part Number
10x	26000116
20x	26000117
50x	26000118
100x	26000119