```
.MODEL PNP PNP
.MODEL NPN NPN
.MODEL DIODE D

.OPTIONS savecurrents

.dc v5 -12 12 0.1

.control
run
.endc
```

```
.INCLUDE "/opt/spice-models/opamp/OPAMP.lib"
.INCLUDE "/opt/spice-models/nmos/IXTH24N50L.lib"
.INCLUDE "/opt/spice-models/pmos/IXTH10P60.lib"
.INCLUDE "/opt/spice-models/pnp/fmmt560.lib"
.INCLUDE "/opt/spice-models/npn/PBHV2160Z.lib"
.INCLUDE "/opt/spice-models/npn/PBHV8560Z.lib"
```

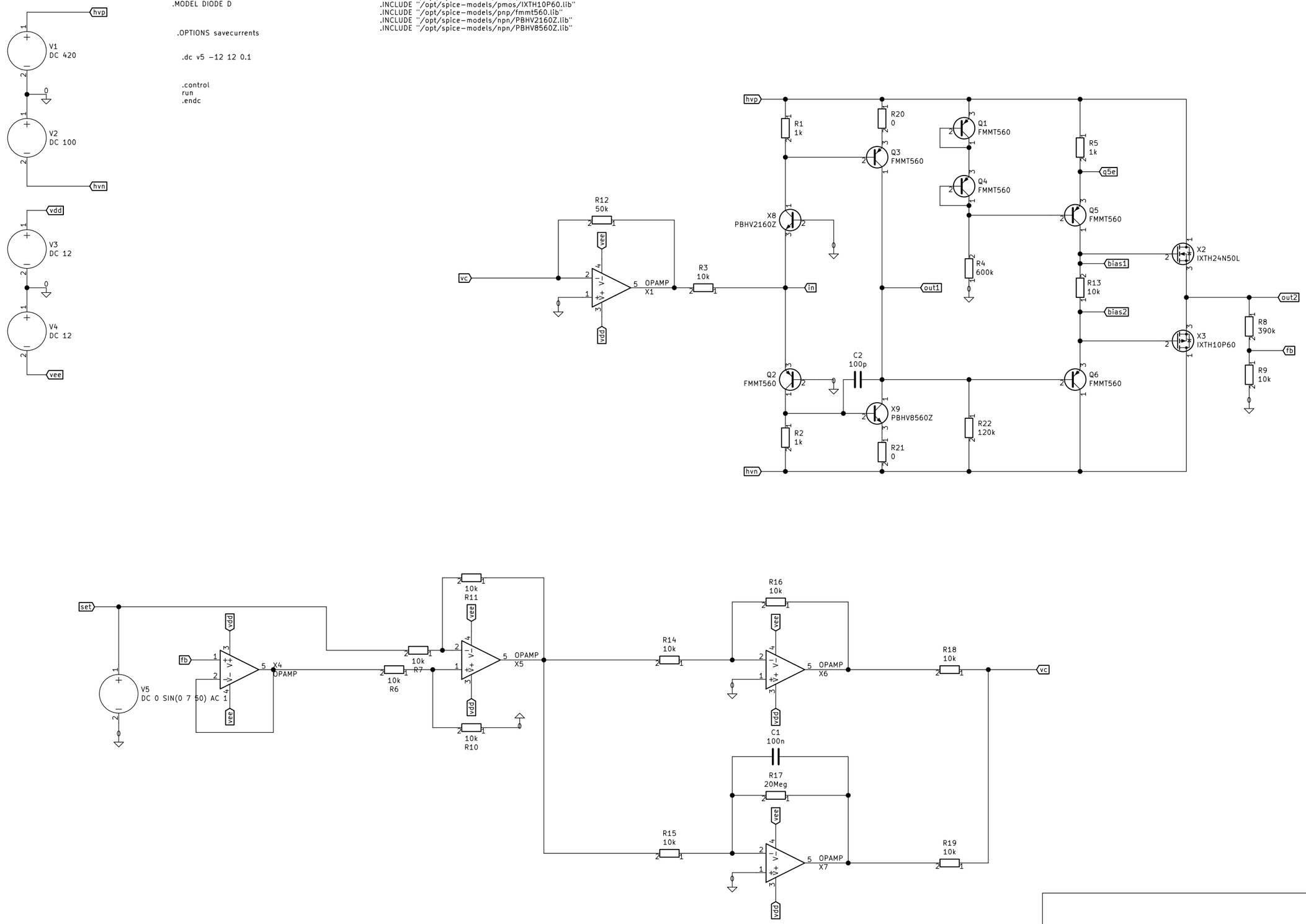

Sheet: /
File: hv0.sch

Title:

Size: A3	Date:	Rev:
KiCad E.D.A. eeschema 5.1.4		Id: 1/1