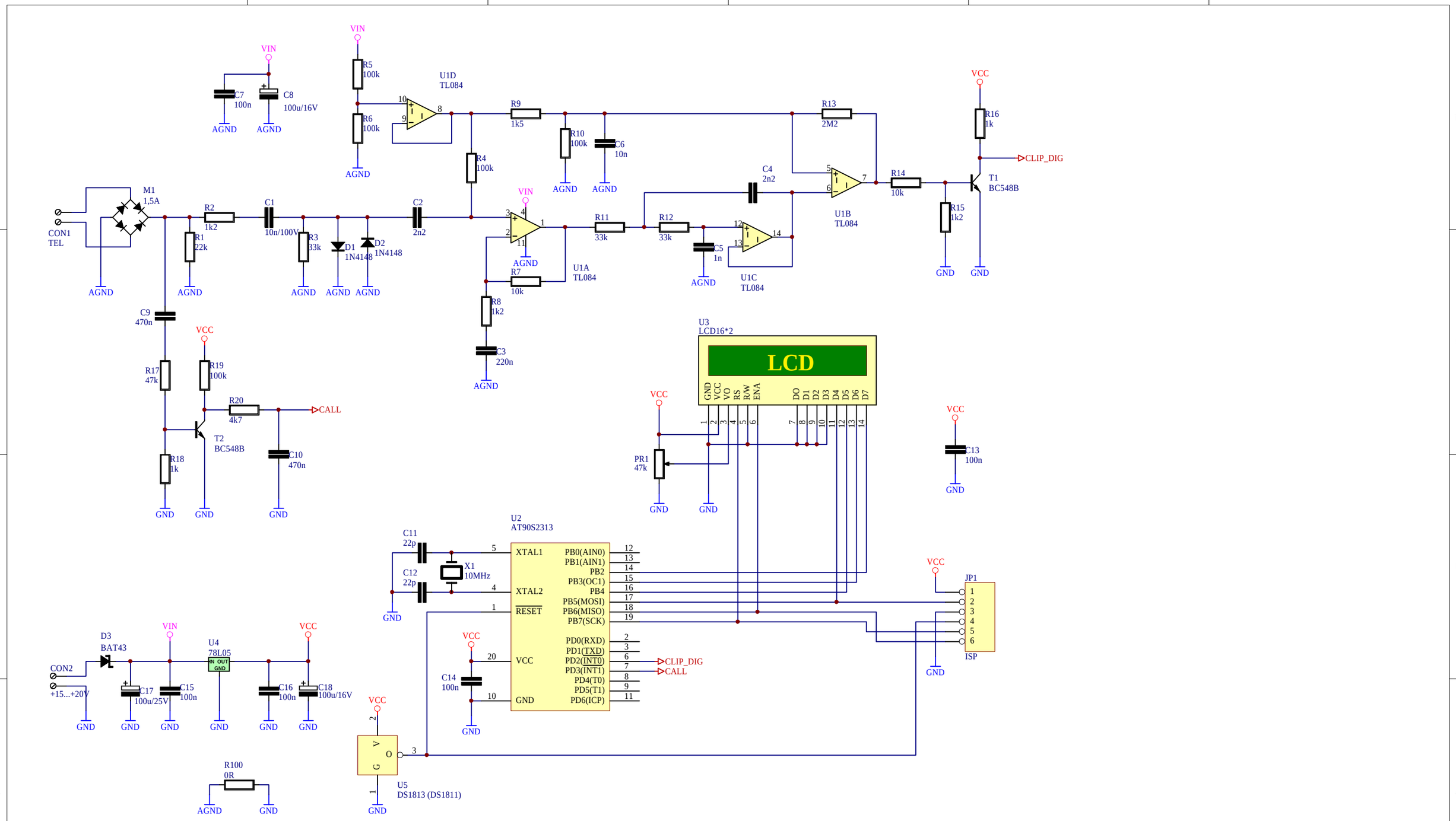

Title		
Size	Number	Revision
Date: 1-Dec-2008	Sheet of	
File: C:\Dokumente und Einstellungen\Administrator\Desktop\soft_clip.sch	Drawn By:	