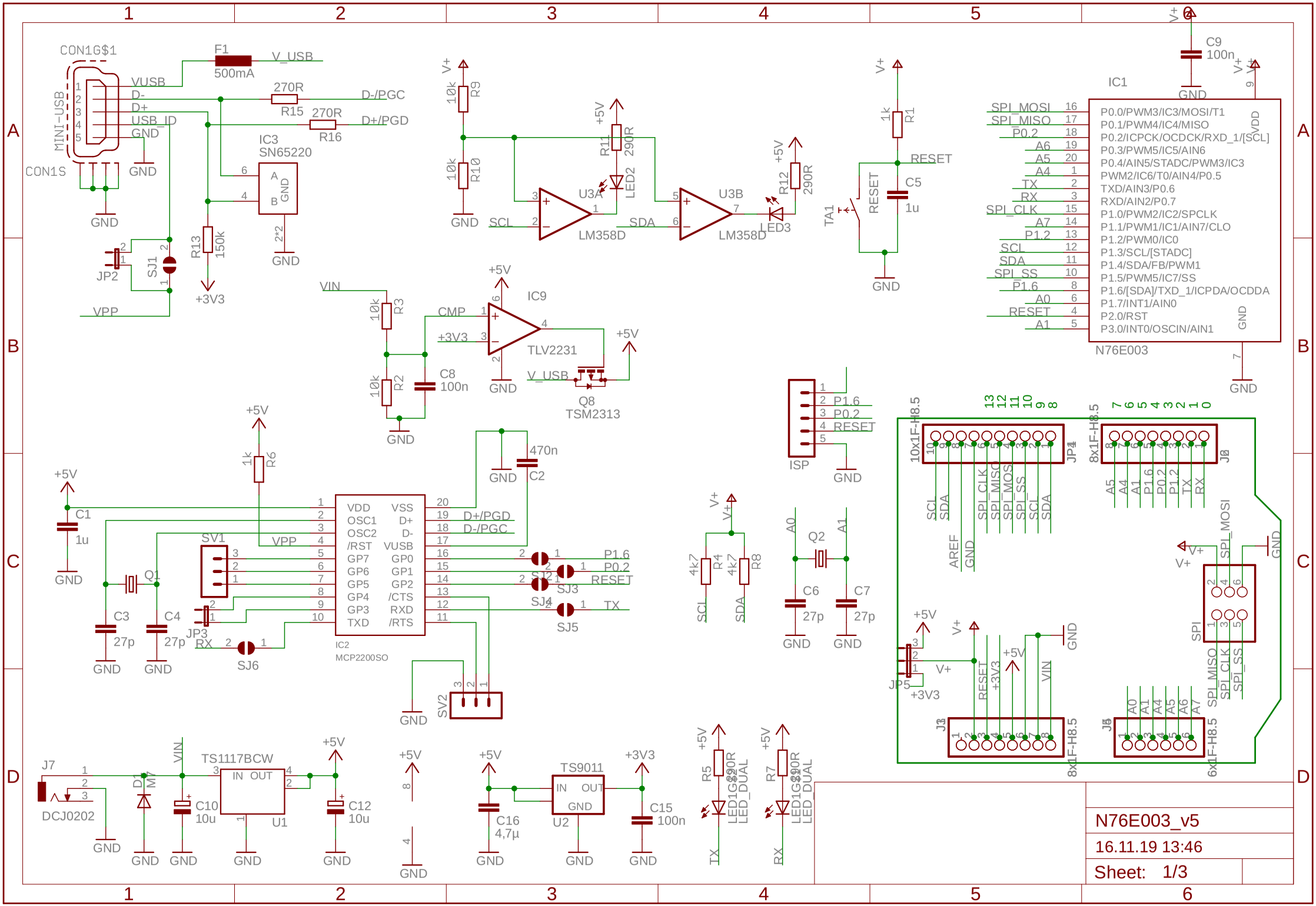
CON1G$1
MINI-USB
CON1S
VUSB
D-
D+
USB_ID
GND
F1
500mA
V_USB
270R
R15
270R
R16
D-/PGC
D+/PGD
IC3
SN65220
R13
150k
+3V3
JP2
SJ1
VPP
10k
R9
10k
R10
+5V
R11
290R
LED2
U3A
LM358D
SCL
SDA
U3B
LM358D
R12
290R
LED3
1k
R1
RESET
C5
1u
TA1
C9
100n
IC1
N76E003
SPI_MOSI
SPI_MISO
P0.2
A6
A5
A4
TX
RX
SPI_CLK
A7
P1.2
SCL
SDA
SPI_SS
P1.6
A0
RESET
A1
P0.0/PWM3/IC3/MOSI/T1
P0.1/PWM4/IC4/MISO
P0.2/ICPCK/OCDCK/RXD_1/[SCL]
P0.3/PWM5/IC5/AIN6
P0.4/AIN5/STADC/PWM3/IC3
PWM2/IC6/T0/AIN4/P0.5
TXD/AIN3/P0.6
RXD/AIN2/P0.7
P1.0/PWM2/IC2/SPCLK
P1.1/PWM1/IC1/AIN7/CLO
P1.2/PWM0/IC0
P1.3/SCL/[STADC]
P1.4/SDA/FB/PWM1
P1.5/PWM5/IC7/SS
P1.6/[SDA]/TXD_1/ICPDA/OCDDA
P1.7/INT1/AIN0
P2.0/RST
P3.0/INT0/OSCIN/AIN1
VDD
GND
VIN
10k
R3
10k
R2
C8
100n
CMP
+3V3
IC9
TLV2231
V_USB
Q8
TSM2313
ISP
P1.6
P0.2
RESET
10x1F-H8.5
JP1
8x1F-H8.5
J8
SCL
SDA
SPI_CLK
SPI_MISO
SPI_MOSI
SPI_SS
AREF
A5
A4
A1
P1.6
P0.2
P1.2
TX
RX
SPI
JP5
J1
J5
6x1F-H8.5
A0
A1
A4
A5
A6
A7
1k
R6
470n
C2
C1
1u
Q1
SV1
VPP
C3
27p
C4
27p
JP3
RX
SJ6
IC2
MCP2200SO
VDD
OSC1
OSC2
/RST
GP7
GP6
GP5
GP4
GP3
TXD
VSS
D+
D-
VUSB
GP0
GP1
GP2
/CTS
RXD
/RTS
D+/PGD
D-/PGC
P1.6
P0.2
RESET
TX
SJ2
SJ3
SJ4
SJ5
SV2
4k7
R4
4k7
R8
Q2
C6
27p
C7
27p
J7
DCJ0202
D1
M7
C10
10u
TS1117BCW
IN
OUT
U1
C12
10u
C16
4,7µ
TS9011
U2
C15
100n
R5
LED1G220R
LED_DUAL
R7
LED1G220R
LED_DUAL
N76E003_v5
16.11.19 13:46
Sheet: 1/3

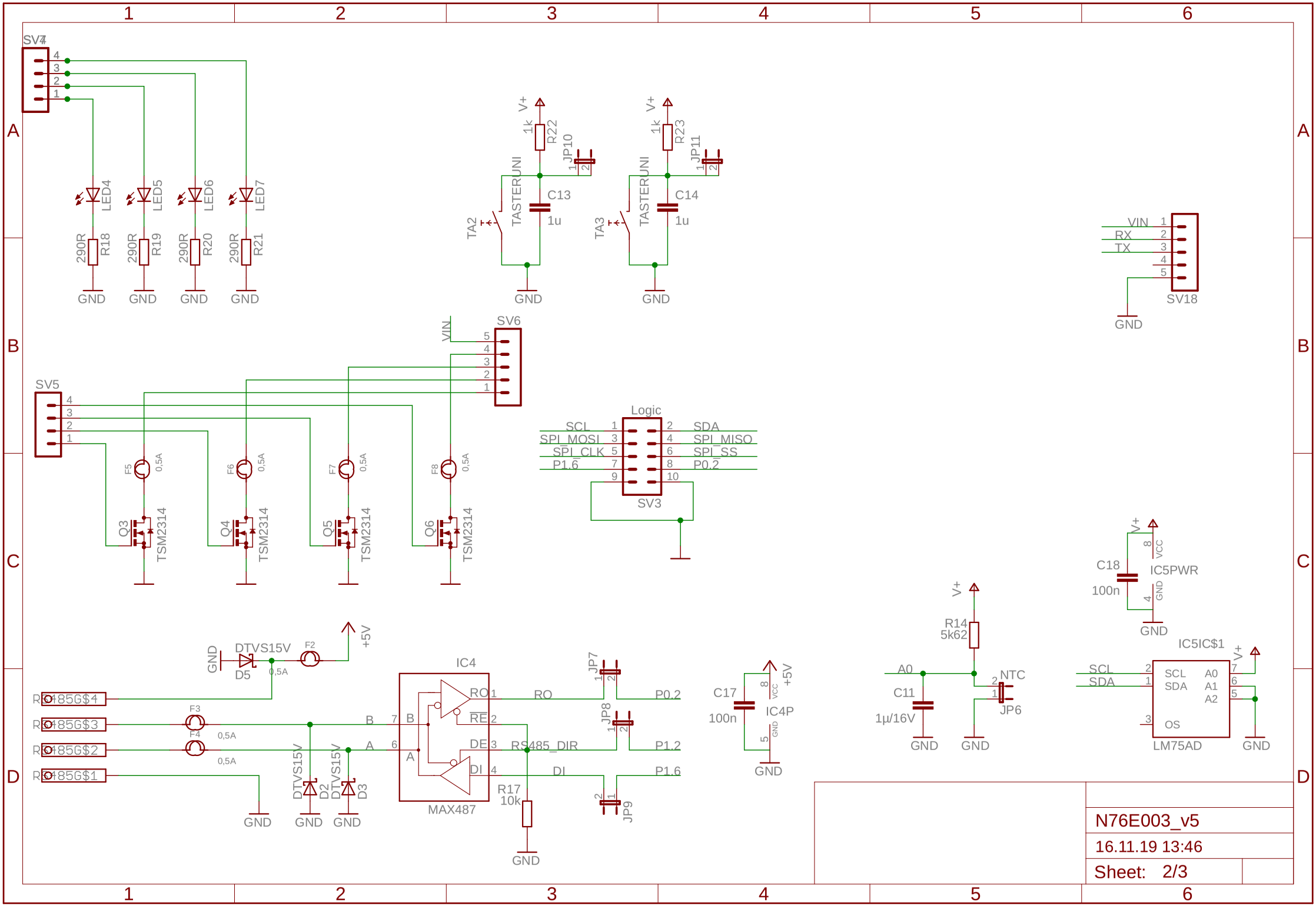
SV4
LED4
LED5
LED6
LED7
290R R18
290R R19
290R R20
290R R21
GND
V+
1k R22
JP10
TASTERUNI
C13
1u
TA2
1k R23
JP11
C14
TA3
SV18
VIN
RX
TX
SV6
SV5
F5 0,5A
F6 0,5A
F7 0,5A
F8 0,5A
Q3 TSM2314
Q4 TSM2314
Q5 TSM2314
Q6 TSM2314
Logic
SCL
SPI_MOSI
SPI_CLK
P1.6
SDA
SPI_MISO
SPI_SS
P0.2
SV3
DTVS15V
D5
F2
+5V
RS485G$4
RS485G$3
RS485G$2
RS485G$1
F3
F4
IC4
MAX487
RO
RE
DE
DI
B
A
RS485_DIR
JP7
JP8
JP9
P0.2
P1.2
P1.6
R17 10k
D2
D3
C17 100n
IC4P
R14 5k62
NTC
JP6
C11 1µ/16V
A0
C18 100n
IC5PWR
VCC
GND
IC5IC$1
SCL
SDA
A0
A1
A2
OS
LM75AD
N76E003_v5
16.11.19 13:46
Sheet: 2/3